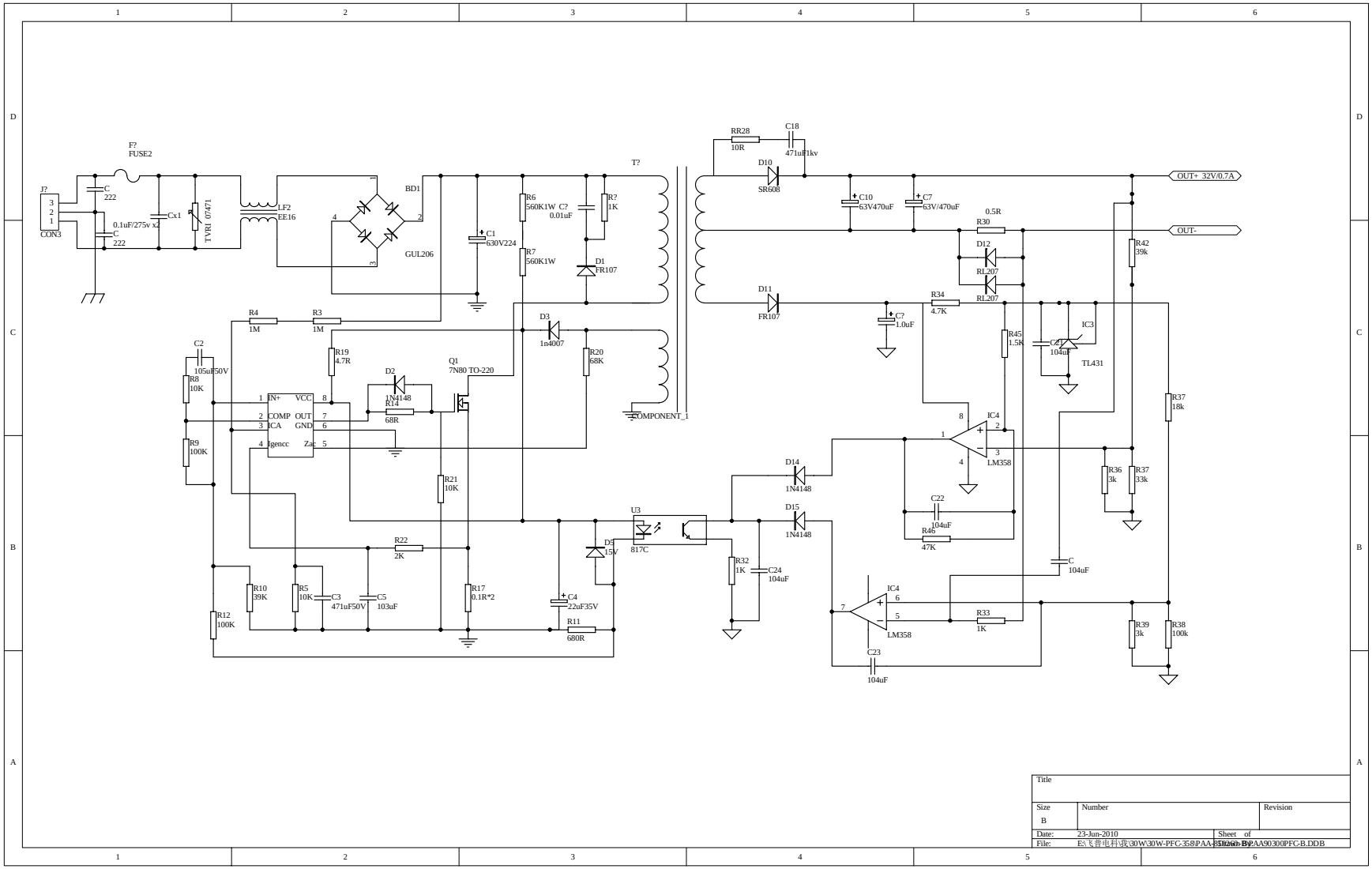

Title		
Size B	Number	Revision
Date: 23-Jun-2010	Sheet of	
File: E:\飞普电科技\30W\30W-PFC-358\PAA-B\PAA90300PFC-B.DDB	Drawn By:	