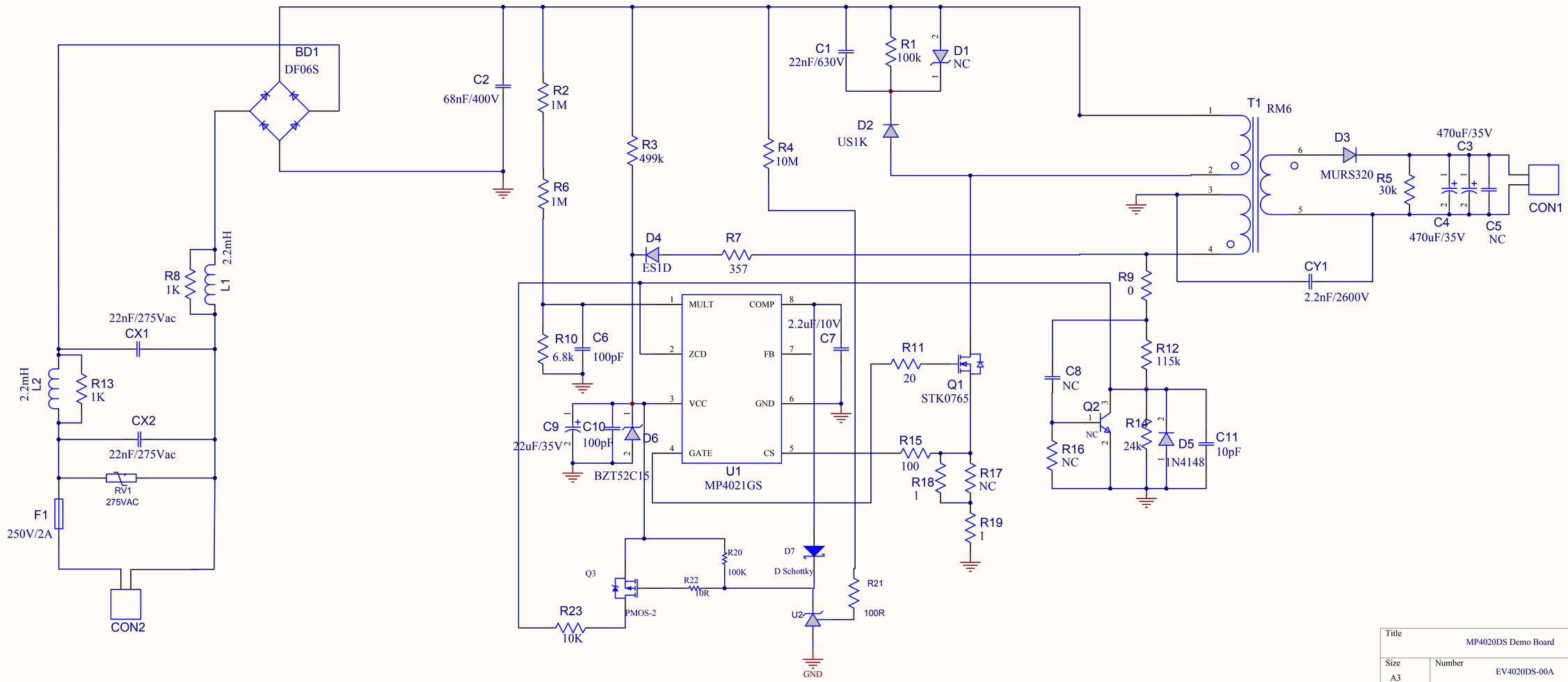

Title	MP4020DS Demo Board	
Size A3	Number EV4020DS-00A	Revision 00A
Date: 2011-5-10		Sheet of
File: D:\MPS\..\4020DS-R5_20110510.SchDoc		Drawn By: