REACTOR
Microelectronics

RM3261 Application Information
--5V1A(±5%)

陕西亚成微电子有限责任公司
应用工程部
2011.04

REACTOR
Microelectronics

OUTLINE

- RM3261Introduction
- Electronical Characteristic Description
- Application Circuit
- BOM List
- Transformer Parameter
- Test Report

一、RM3261 Description

RM326X is a high performance off-line PWM power switch for low power AC/DC charger and adapter applications, It operates in primary-side sensing and regulation. Consequently, opto-coupler and TL431 could be eliminated, Proprietary constant voltage and constant current control is integrated as as shown in the figure below.

In constant current control,the current and output power setting can be adjusted externally by the sense resistor RS at CS pin,In constant voltage control,multi-mode operations are utilized to achieve high performance and high efficiency.Inaddition,good load regulation is achieved by the built-in cable drop compensation. Device operates in PFM in CC mode as well at large load condition and it operates in PWM with frequency reduction at light/medium load.

Features

- ±5% constant voltage regulation at universal AC input.
- High precision constant current regulation at universal AC input.
- Primary-side sensing and regulation without TL431 and opto-coupler.
- Programmable constant voltage and constant current regulation.
- Adjustable constant current and output power setting.
- Built-in secondary constant current control with primary side feedback.
- Built-in adaptive current peak regulation.
- Built-in primary winding inductance compensation.
- Programmable cable drop compensation.
- Power on soft-start.
- Built-in Leading Edge Blanking.
- Cycle-by-Cycle current limiting.
- VDD under voltage lockout with hysteresis.
- VDD over voltage protect.
- VDD clamp.

PIN configuration (top view)

REACTOR
Microelectronics

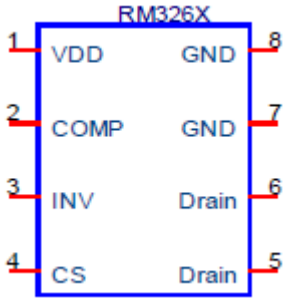

Pin Num	Pin name	I/O	Description
1	VDD	P	Power Supply
2	COMP	I	Loop compensation for CV stability
3	INV	I	The voltage feedback from auxiliary winding, connectde to resistor divider from auxiliary winding reflecting output voltage,PWM duty cycle is determined by EA output and current sense siqnal at PIN 4.
4	CS	I	Current sense input
5/6	Drain	o	HV MOSFET drain pin.the drain pin is connected to the primary lead of the transformer
7/8	GND	P	Ground

二、Electronical Characteristics

(TA=25℃,VDD=VDDG=16V,if not otherwise noted)

Symbol	Parameter	Conditions	Min	Typ	Max	Units
I DD ST	Standby Current	VDD=13V		5	20	uA
I DD OP	Operation Current	INV=2V,CS=0V, VDD=VDDG=18V		2	3	mA
UVLO(ON)	VDD Under Voltage Lockout Enter	VDD falling	8.2	9.0	10.5	V
UVLO(OFF)	VDD Under Voltage Lockout Exit	VDD rising	13.5	14.8	16.0	V
VDD_clamp	Maximum VDD operation voltage	IDD=10mA	27	28.5	30	V
OVP	Over voltage protection Threshold	Ramp VDD until gate shut down	26	27.5	29	V

Symbol	Parameter	Conditions	Min	Typ	Max	Units
Freq_Max	IC Maximum frequency		55	60	65	KHz
Freq_Nom	System Nominal switch frequency			50		KHz
Freq_start up		INV=0V, Comp=5V		14		KHz
△f/Freq	Frequency shuffling range			+/-6		%
Vref_EA	Reference voltage for EA		1.97	2	2.03	V
I_COMP_ MAX	Max.Cable compensation current	INV=2V, Comp=0V		37.5		uA
BVdss	MOSFET Drain-Source Breakdown Voltage		600			V

三、Application circuit

REACTOR
Microelectronics

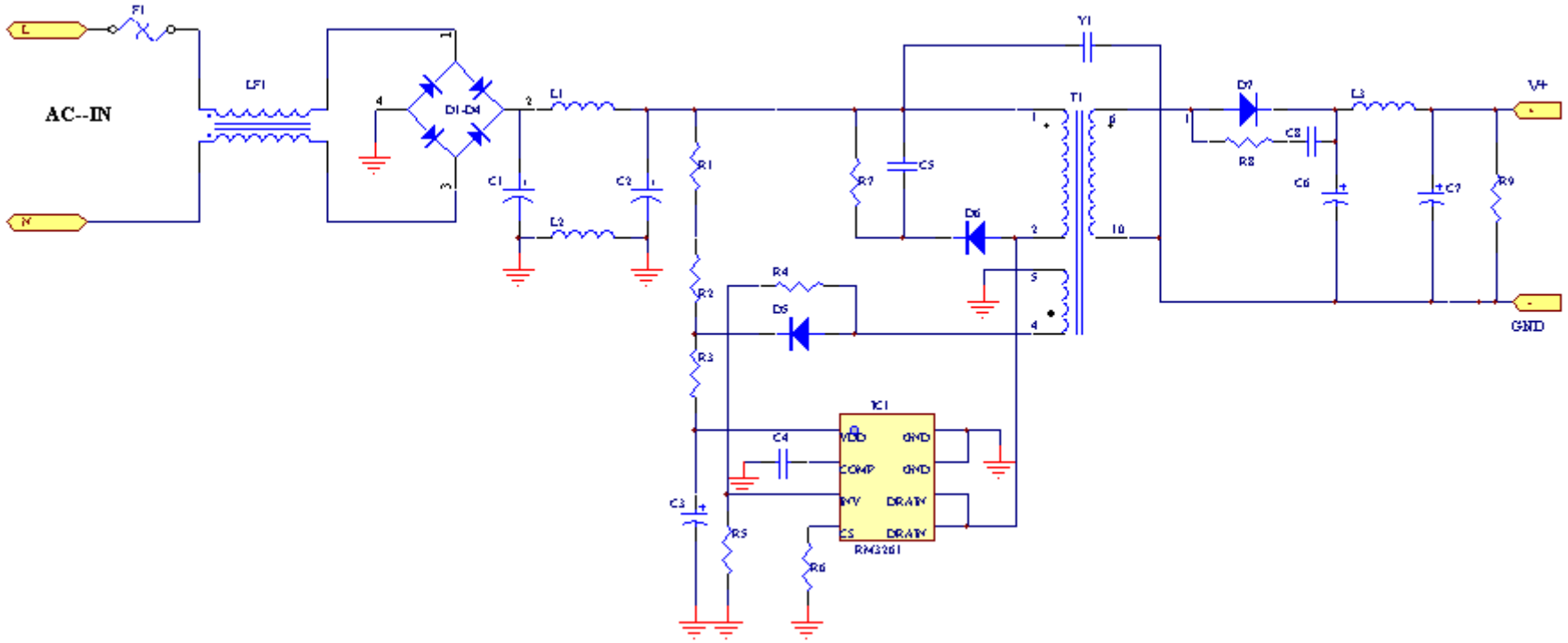

PCB

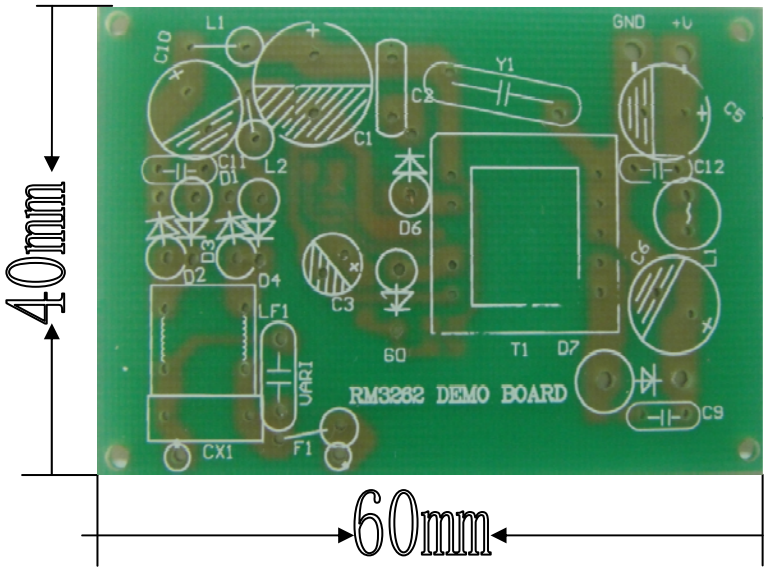
40mm
60mm
RM3262 DEMO BOARD
GND
+V
L1
C10
C1
C2
Y1
C5
C11
D1
L2
C12
D6
D3
D2
D4
C3
C6
L7
LF1
VARI
60
T1
D7
C9
CX1
F1

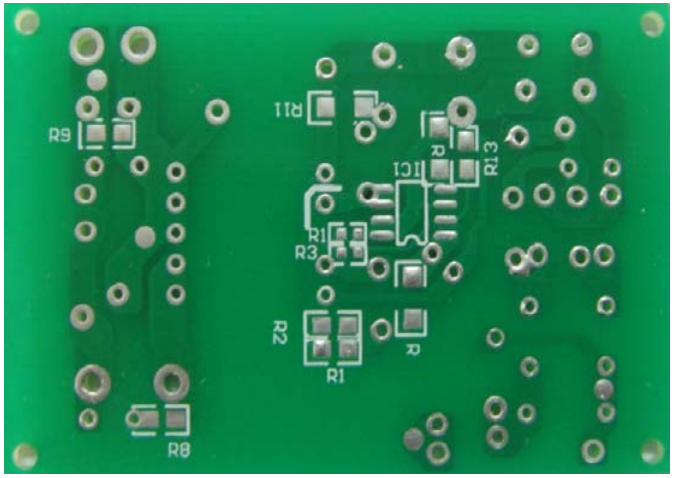
R9
R11
R13
IC1
R1
R3
R2
R1
R8

四、BOM　LIST

P/N	Description	NO.	Package	Notice
CX1				
C1/C2	4.7uF_400V	2	DIP	
C3	1uF_50V	1	DIP	
C4	103_1206	1	SMD	
C5	102_2KV	1	DIP	
C6	1200uF_6.3V	1	DIP	
C7	470uF_16V	1	DIP	
C8	102_1206	1	SMD	
Y1	222_2KV	1	DIP	
R1/R2	205_0805	2	SMD	
R3	2R7_1206	1	SMD	
R4	333_0805	1	SMD	
R5	362_0805	1	SMD	
R6	1R8_1206	1	SMD	
R7	154_0805	1	SMD	
R8	100_0805	1	SMD	
R9	431_0805	1	SMD	
D1-D4	IN4007	4	DIP	
D5、D6	FR107	2	DIP	
D7	SR360	1	DIP	
LF1	1mH	2	DIP	
L1/L2	1mH	2	DIP	
L3	330	1	DIP	
F1	1A_250V	1	DIP	
T1	transformer	1	DIP	
IC1	RM3261	1	DIP	

五、Transformer

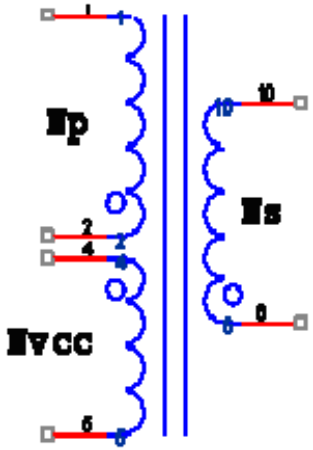

0.9cm宽绝缘胶纸三层
Nvcc PIN4→PIN5 0.15mm 47T 密绕 一层
0.9cm宽绝缘胶纸三层
Ns PIN6→PIN10 0.37mm 13T 居中密绕
0.9cm宽绝缘胶纸三层
Np PIN2 →PIN1 0.21mm 130T 密绕四层

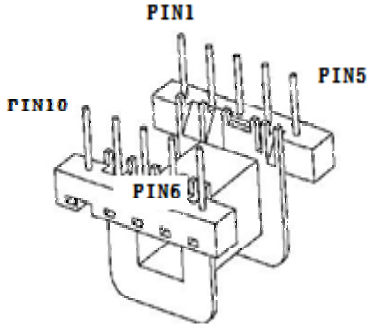

磁芯要求：PC40或者同等材质EE16

- 主感量：Lp=1.6mH±5%,(PIN2→PIN1)
- 测试条件：(1)、测试频率1Khz；
  (2)、测试电压0.25V；
- 耐压：PRI-SEC：3750Vac1MIN 1mA(max）
  PRI-CORE：1500Vac1MIN 1mA(max)
  SEC-CORE：1500Vac1MIN 1mA(max)

六、Test Report-Test Condition and Test SPEC.

Description	MIN	TPY	MAX	Test Data	Result
Input					
Voltage Frequency	90V 50hz		265V 60hz	85V-265V	PASS
Output					
Voltage Current Load regulation Power	4.75V -5%	5V 5W	5.25V 1A 5%	 1% 4.99 W (avg.)	PASS PASS PASS PASS
Efficiency					
Energy Star(5)				68.66%(avg.)	PASS

Test Data

REACTOR
Microelectronics

Line Regulation

Test Condition: Vin=90V-265V, Iload=0A

Vin(V)	90	115	185	220	235	265
Vout(V)	4.95	4.95	4.95	4.95	4.95	4.94

Line regualtion: 0.2% ; Result: PASS ;

Test Condition: Vin=85V-265V, Iload=1A

Vin(V)	90	115	185	220	235	265
Vout(V)	4.99	4.99	4.98	4.98	4.98	4.98

Line regualtion: 0.2 %; Result: PASS ;

OCP

Vin(V)	90	115	185	220	265
OCP(A)	1.65	1.70	1.80	1.73	1.30

Notice:Iocp=(1.3-1.8)Iout(max);

Test Data

REACTOR
Microelectronics

Efficiency

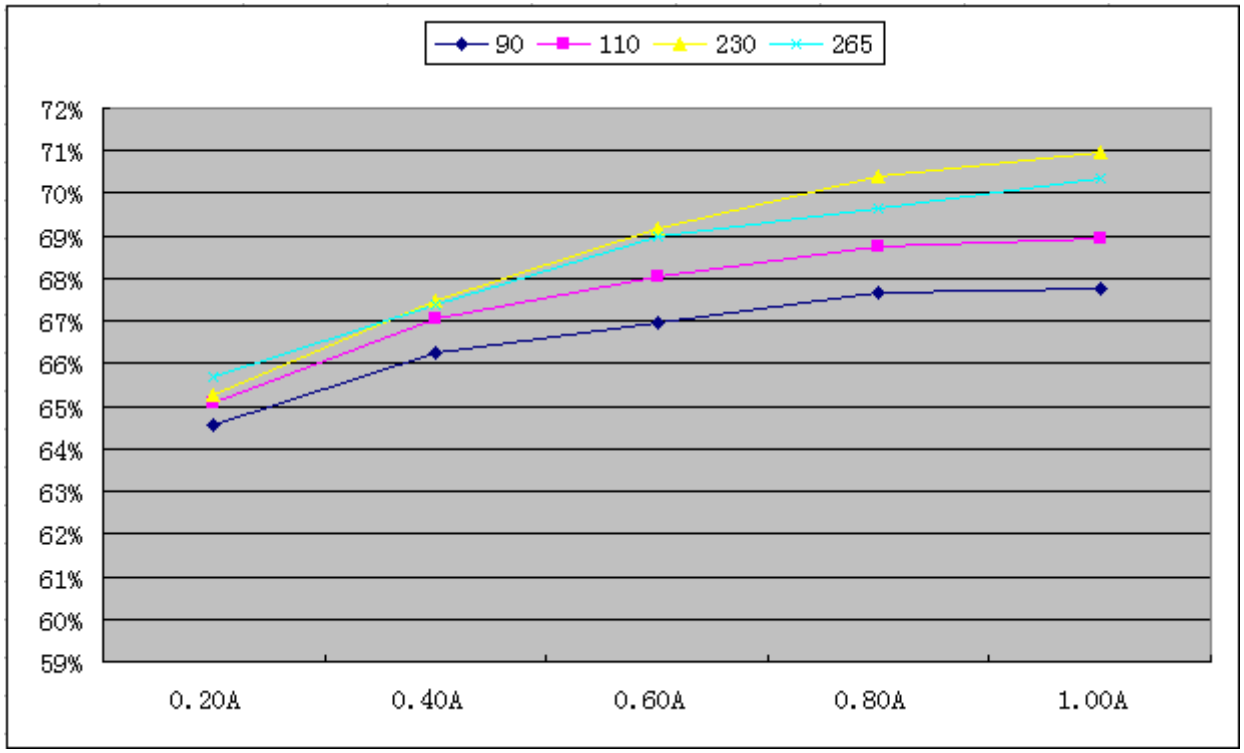

DEMO Photo

RM3262 DEMO BOARD
GND
C1
L2
D4
LF1
CX1
C9
330

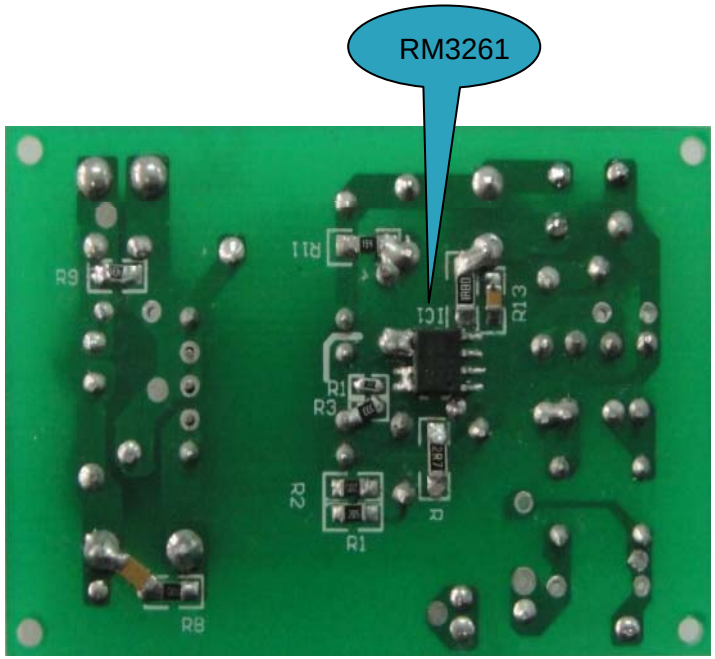
RM3261
R9
R11
R13
R1
R3
R2
R8

REACTOR
Microelectronics

THE END