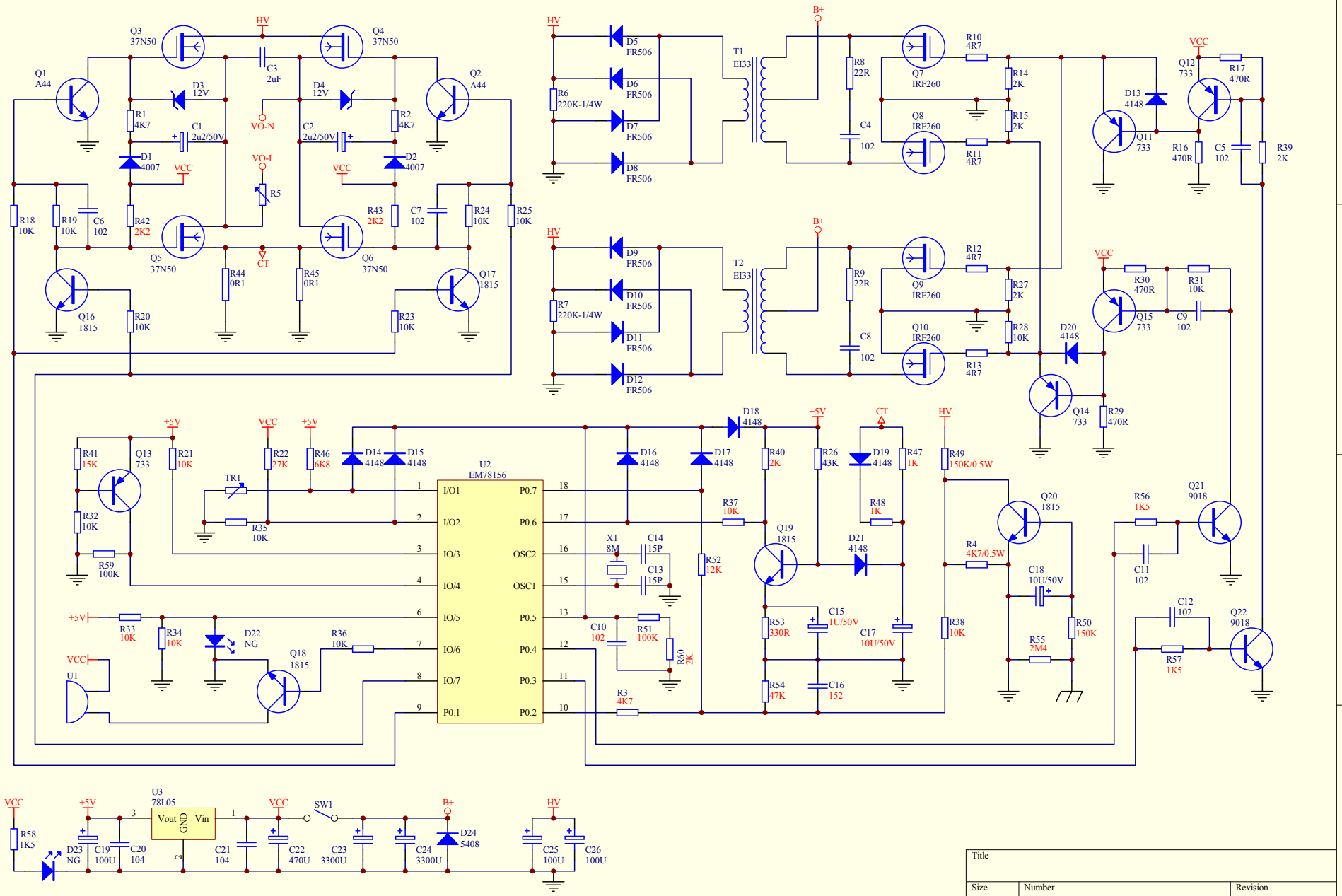

Title		
Size B	Number	Revision
Date: 11-Oct-2011		Sheet of
File: G:\1200W逆变器-EM78156-B.Ddb		Drawn By: