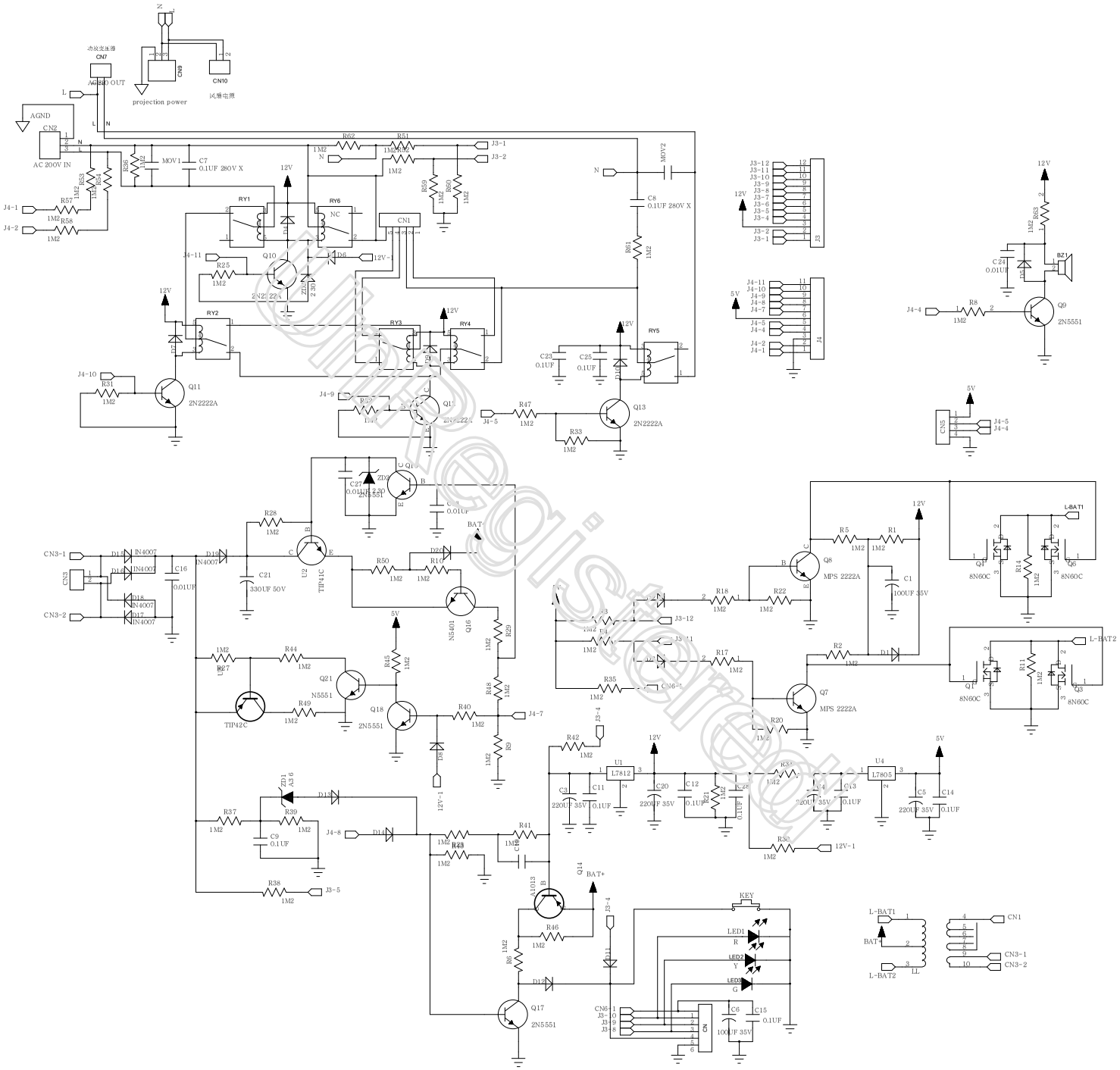
CN7
AGND OUT
projection power
CN9
CN10
风扇电源
AGND
CN2
AC 200V IN
MOV1
C7
0.1UF 280V X
MOV2
C8
0.1UF 280V X
RY1
RY2
RY3
RY4
RY5
RY6
CN1
Q10
Q11
2N2222A
Q13
2N2222A
Q9
2N5551
BZ1
CN3
CN3-1
CN3-2
U2
TIP41C
TIP42C
Q16
N5401
Q21
N5551
Q18
2N5551
Q17
2N5551
Q14
A1013
Q8
MPS 2222A
Q7
MPS 2222A
Q1
Q3
Q4
Q6
8N60C
L-BAT1
L-BAT2
U1
L7812
U4
L7805
KEY
LED1
LED2
LED3
CN6
CN5
CN4
J3
J4
J3-1
J3-2
J3-3
J3-4
J3-5
J3-7
J3-8
J3-9
J3-10
J3-11
J3-12
J4-1
J4-2
J4-4
J4-5
J4-7
J4-8
J4-9
J4-10
J4-11
12V
5V
12V-1
BAT+
BAT-
AGND

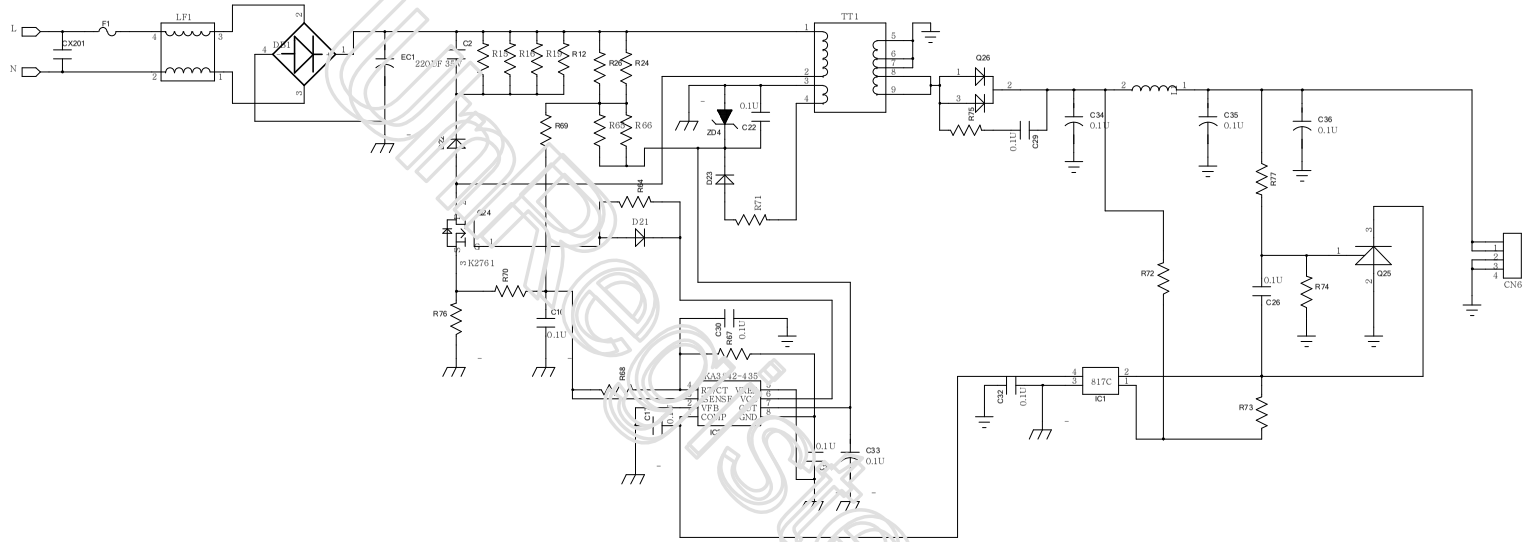

Unregistered

MODEL NO	LABOTRIX GROUP LIMITED			
DESCRIPTION	SHEET:2/2	SCH REVISION:V02	PCB REVISION:V02	
SCH	DRAWN BY	CHECKED BY	TECHINICS BY	APPROVED BY