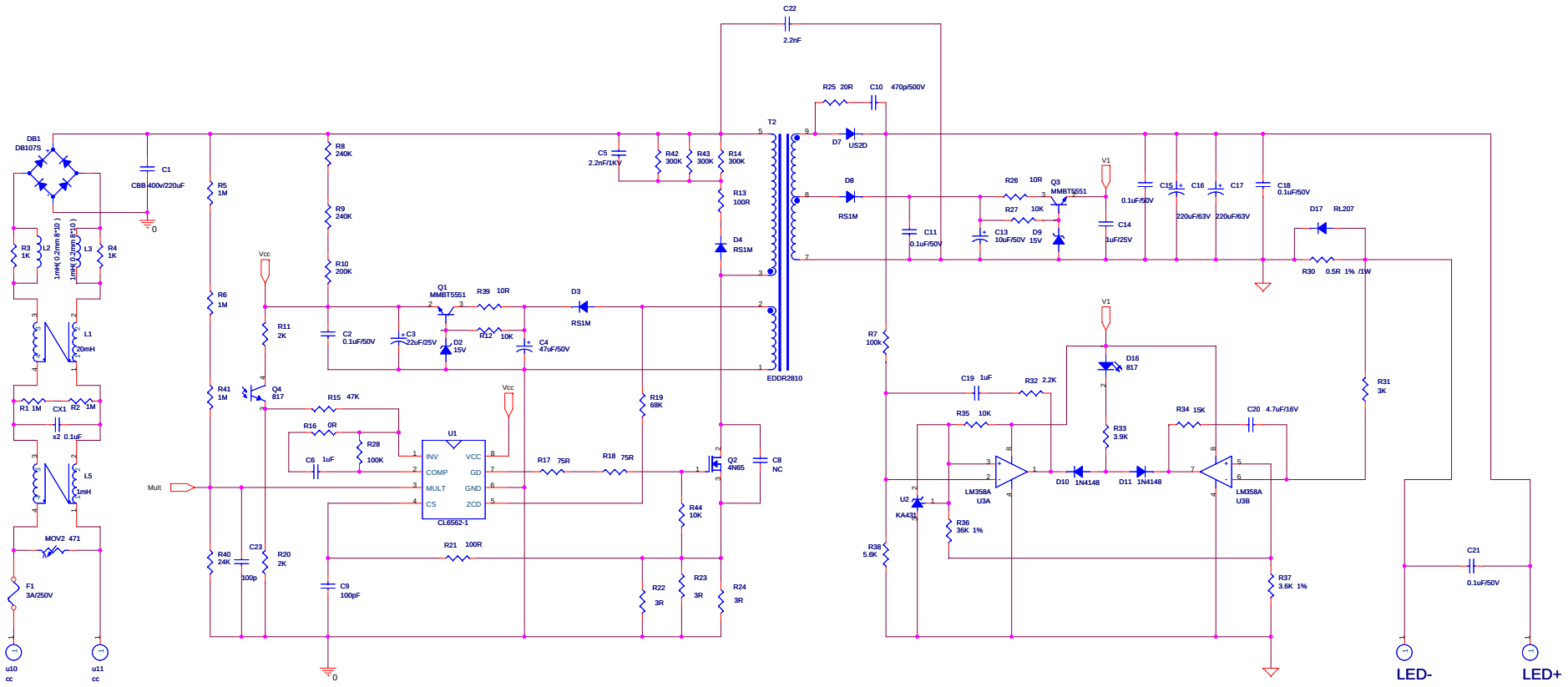

Title <Title>		
Size A2	Document Number <Doc>	Rev <RevCode>
Date: Saturday, May 28, 2011	Sheet 1 of 1	