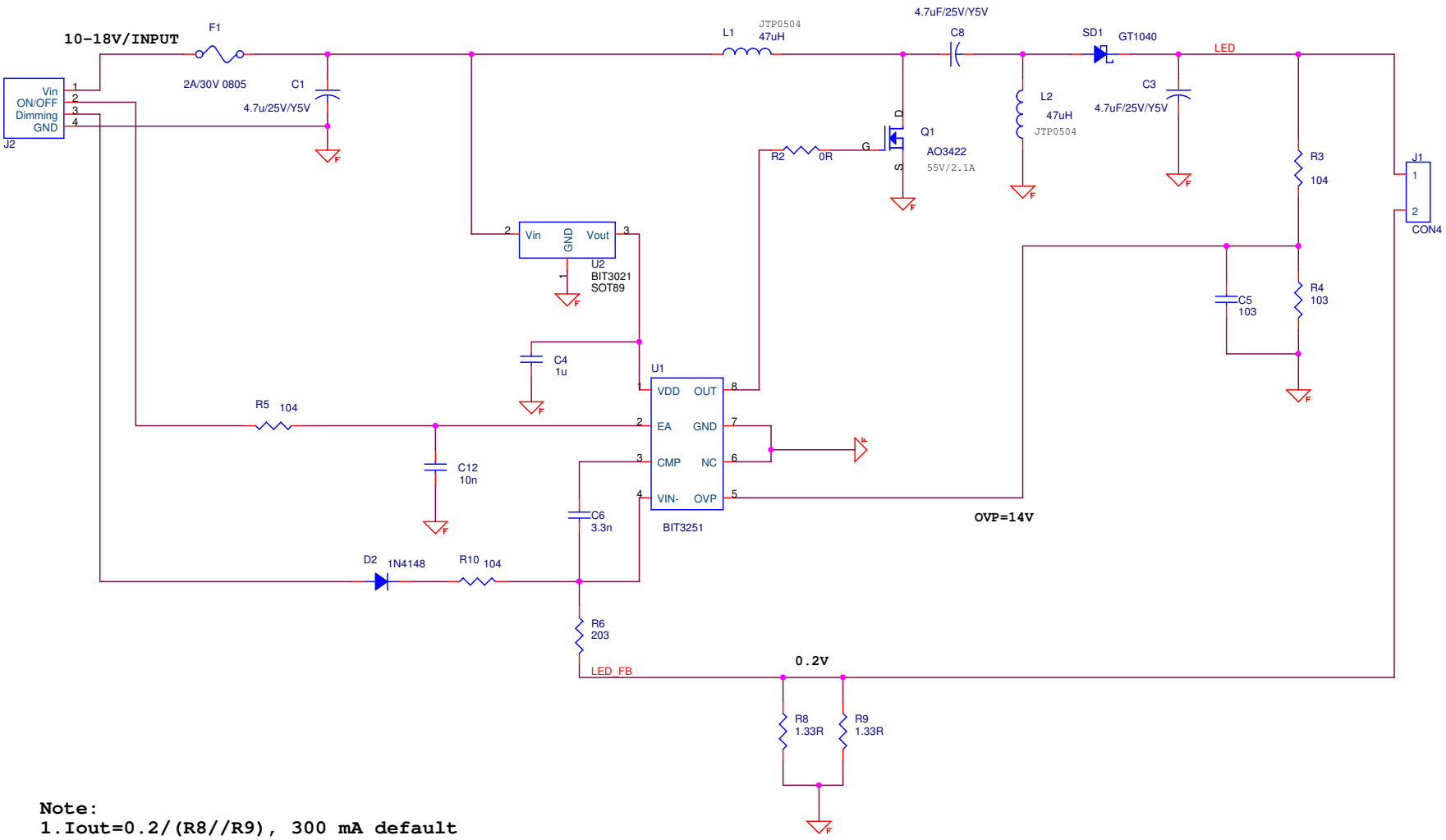

Note:

1. Iout=0.2/(R8//R9), 300 mA default
2. 1.5 V<Vea<4 V, IC Enable
3. OVP setting = 1.5*(R3+R4)/R4,16.5V default

Beyond Innovation Technology Co., LTD.
5F,No.136, Sec.3, Nanjing E. Road,Taipei,Taiwan,R.O.C.
Tel : 886-2-2778-5939 Fax : 886-2-2778-1050

The circuits shown are intended to explain typical application of the products concerned. BITEK is not responsible for any infringement of third party or any other intellectual property rights that may arise from the use of these circuits.

Title	BIT3251 LED driver demo board VER.2		
Size B	Document Number INV527100091	Task Code <Number>	Rev 1.00
Date: Tuesday, March 11, 2008		Sheet 1 of 1	