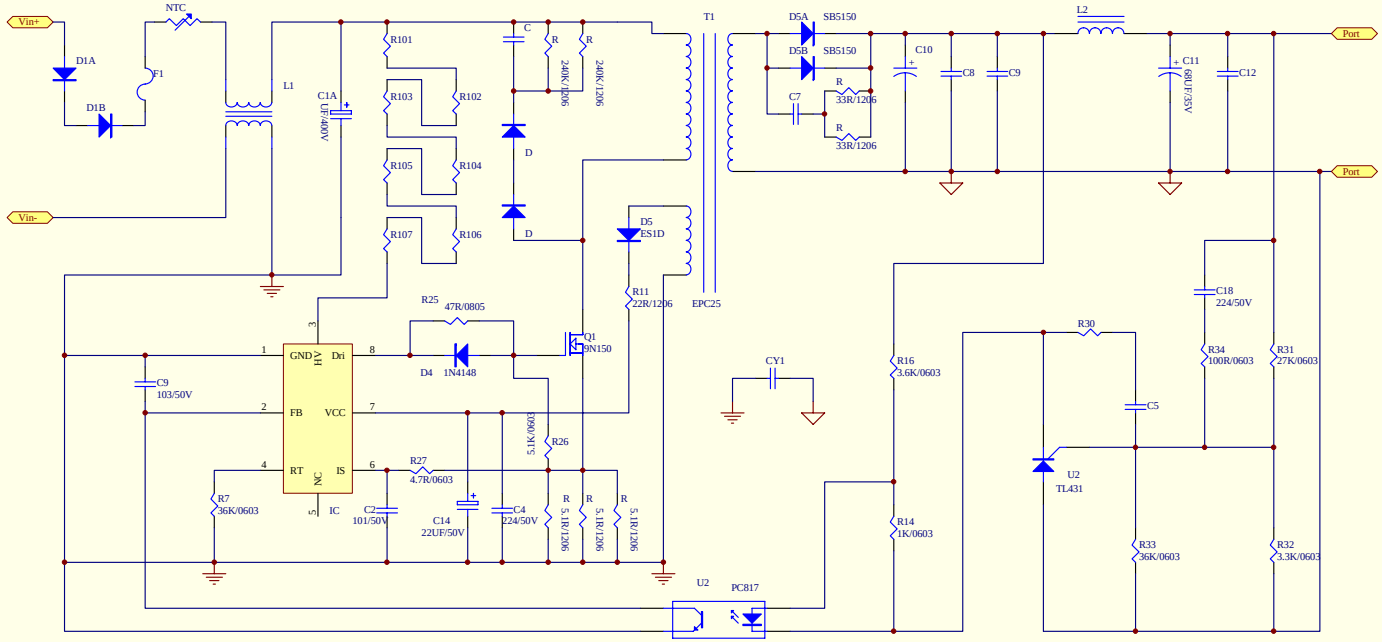

Title		
Size B	Number	Revision
Date: 30-Nov-2011		Sheet of
File: F:\案子\90-1000V\反件 90-1000V.Ddb		Drawn By: