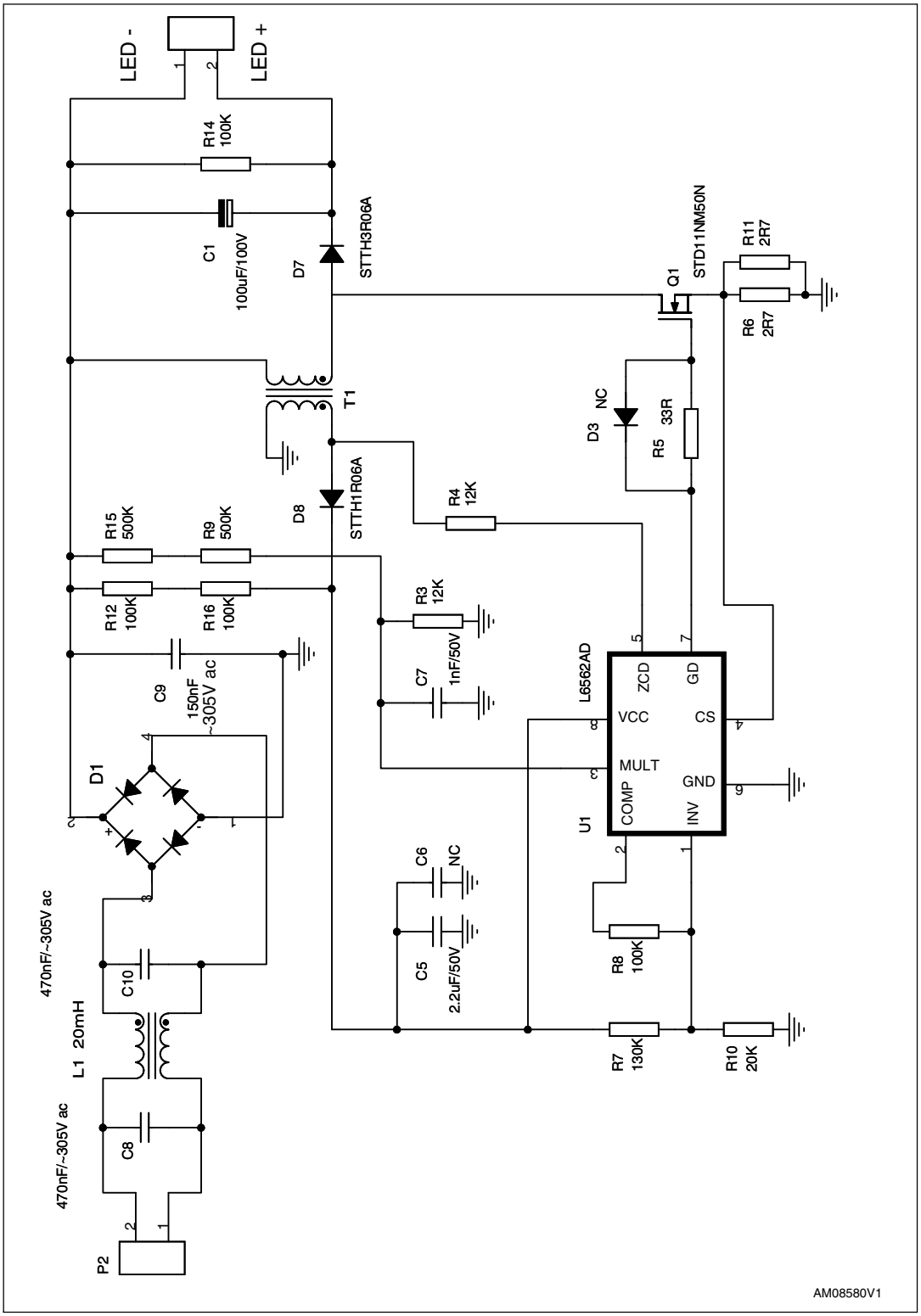STEVAL-ILL027V2 Circuit schematic