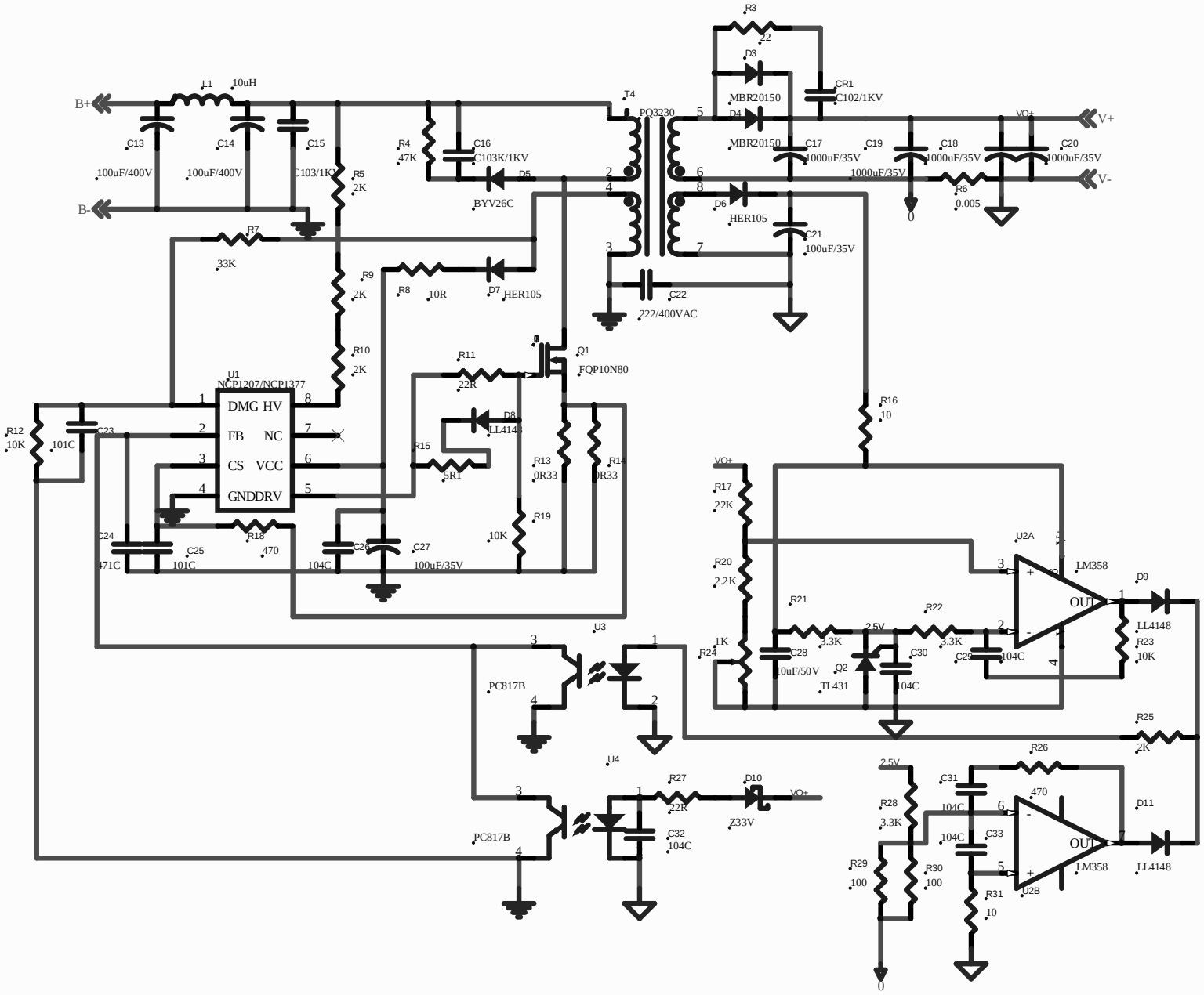
B+
B-
L1
10uH
C13
100uF/400V
C14
100uF/400V
C15
C103/1KV
R5
2K
R4
47K
C16
C103K/1KV
D5
BYV26C
R7
33K
R9
2K
R8
10R
D7
HER105
R10
2K
U1
NCP1207/NCP1377
DMG HV
FB NC
CS VCC
GNDDRV
R12
10K
C23
101C
C24
471C
C25
101C
R18
470
C26
104C
C27
100uF/35V
R11
22R
D8
LL4148
R15
5R1
Q1
FQP10N80
R13
0R33
R14
0R33
R19
10K
T4
PQ3230
R3
22
D3
MBR20150
D4
MBR20150
CR1
C102/1KV
C17
1000uF/35V
C19
1000uF/35V
C18
1000uF/35V
C20
1000uF/35V
VO+
V+
V-
R6
0.005
D6
HER105
C21
100uF/35V
C22
222/400VAC
R16
10
U3
PC817B
U4
PC817B
R27
22R
D10
Z33V
C32
104C
R17
22K
R20
2.2K
R24
1K
U2A
LM358
OUT
R21
3.3K
R22
3.3K
2.5V
C28
10uF/50V
Q2
TL431
C30
104C
C29
104C
D9
LL4148
R23
10K
R25
2K
R26
470
C31
104C
C33
104C
R28
3.3K
R29
100
R30
100
R31
10
U2B
D11
LL4148