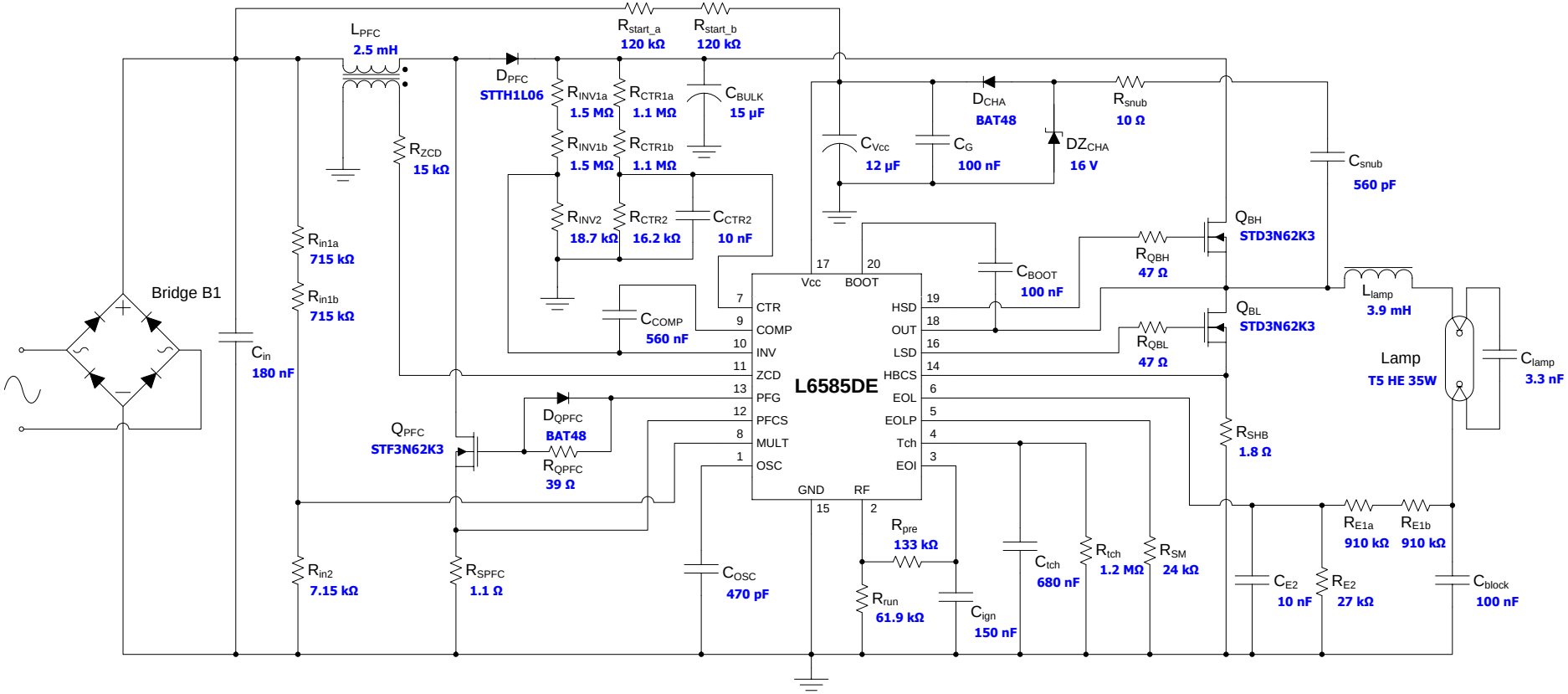
Bridge B1
L_{PFC}
2.5 mH
R_{start_a}
120 kΩ
R_{start_b}
120 kΩ
D_{PFC}
STTH1L06
R_{INV1a}
1.5 MΩ
R_{CTR1a}
1.1 MΩ
C_{BULK}
15 µF
R_{INV1b}
1.5 MΩ
R_{CTR1b}
1.1 MΩ
R_{ZCD}
15 kΩ
R_{INV2}
18.7 kΩ
R_{CTR2}
16.2 kΩ
C_{CTR2}
10 nF
C_{COMP}
560 nF
R_{in1a}
715 kΩ
R_{in1b}
715 kΩ
C_{in}
180 nF
Q_{PFC}
STF3N62K3
D_{QPFC}
BAT48
R_{QPFC}
39 Ω
R_{in2}
7.15 kΩ
R_{SPFC}
1.1 Ω
C_{OSC}
470 pF
C_{Vcc}
12 µF
C_G
100 nF
D_{CHA}
BAT48
DZ_{CHA}
16 V
R_{snub}
10 Ω
C_{snub}
560 pF
C_{BOOT}
100 nF
R_{QBH}
47 Ω
Q_{BH}
STD3N62K3
R_{QBL}
47 Ω
Q_{BL}
STD3N62K3
L_{lamp}
3.9 mH
Lamp
T5 HE 35W
C_{lamp}
3.3 nF
R_{SHB}
1.8 Ω
L6585DE
Vcc
BOOT
CTR
COMP
INV
ZCD
PFG
PFCS
MULT
OSC
GND
RF
HSD
OUT
LSD
HBCS
EOL
EOLP
Tch
EOI
R_{pre}
133 kΩ
R_{run}
61.9 kΩ
C_{ign}
150 nF
C_{tch}
680 nF
R_{tch}
1.2 MΩ
R_{SM}
24 kΩ
R_{E1a}
910 kΩ
R_{E1b}
910 kΩ
C_{E2}
10 nF
R_{E2}
27 kΩ
C_{block}
100 nF