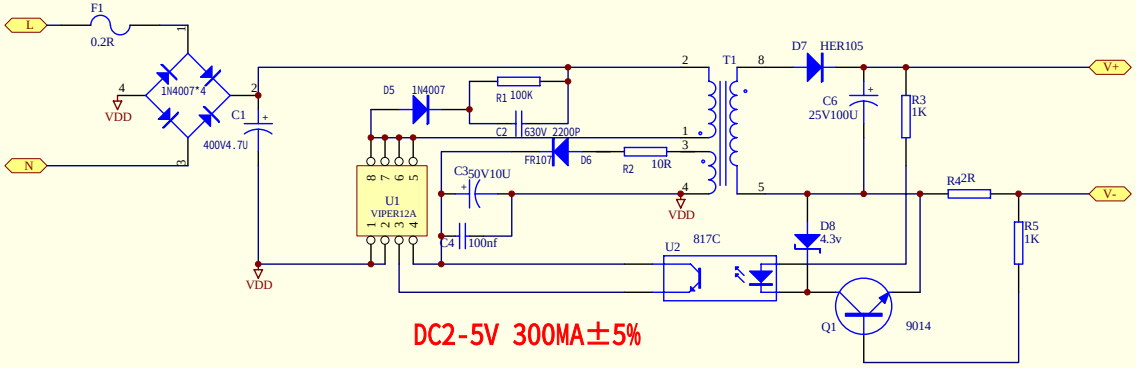

Title		
Size B	Number	Revision
Date: 22-Dec-2011		Sheet of
File: G:\LED驱动电源.Ddb		Drawn By: