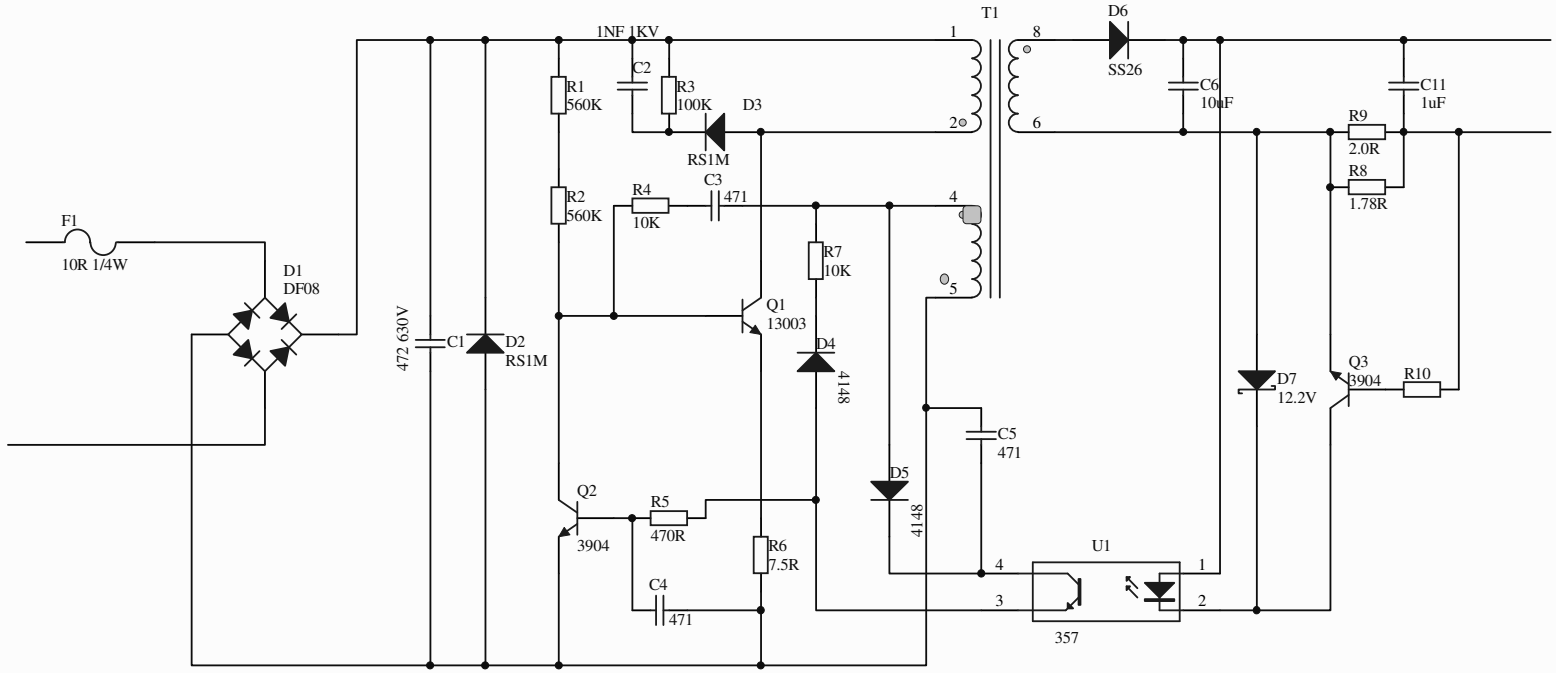

Title		
Size A4	Number	Revision
Date: 2012-3-12	Sheet of	
File: E:\1设计文件\..\GU10调光原理图.SCHDOC	Drawn By:	