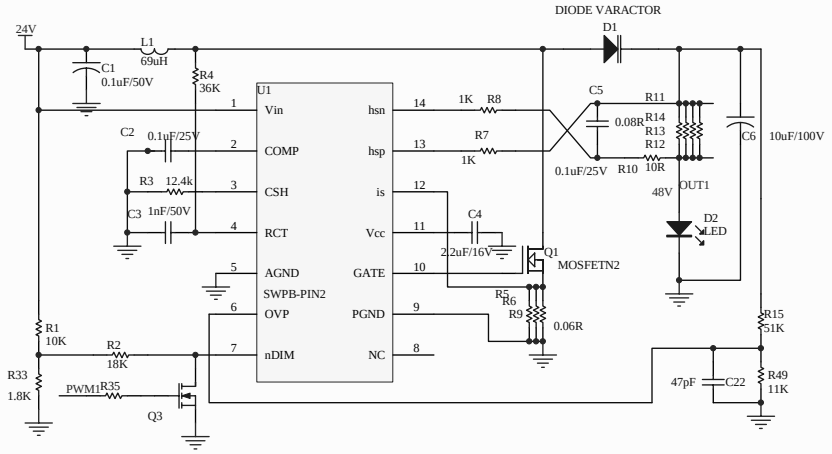

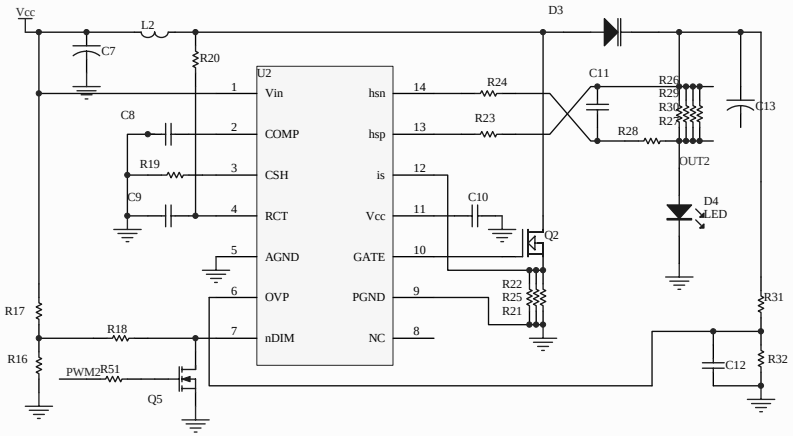

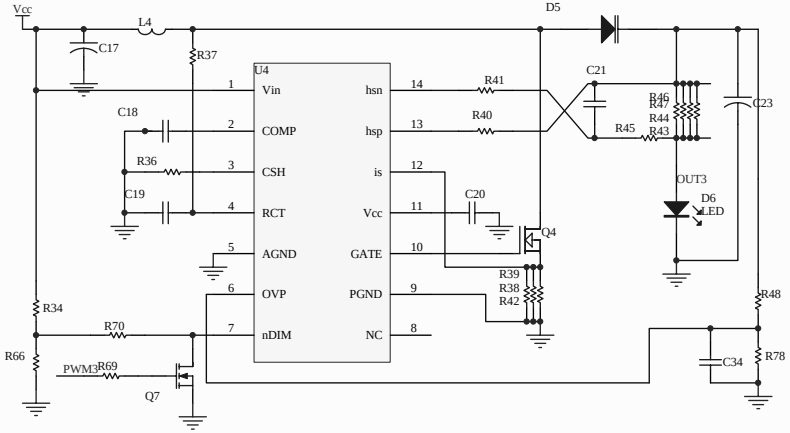

Title		
Size A3	Number	Revision
Date: 20-Mar-2012	Sheet of	
File: D:\我的文档\桌面\PCB\PC2448GG0(DC24-48W恒压LED路灯).DDB	Drawn By:	