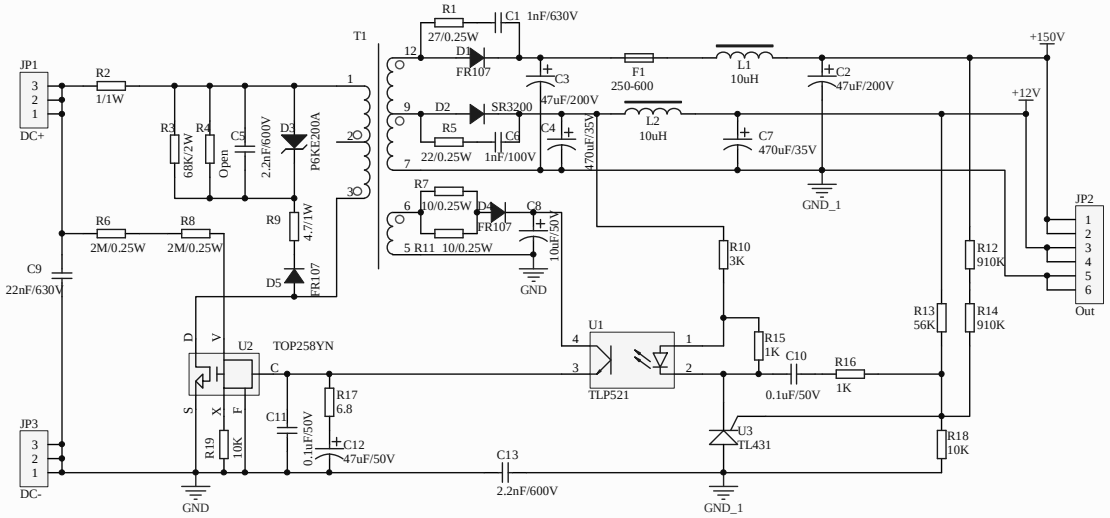

REVSIONS 修订 F / E / D / C / B / A		APPROVED BY 批准	TITLE 名称
		CHECKED BY 审核	DWG. NO. 图号
Innovatech	SIZE 尺寸	DESIGNED BY 设计 陈东杨	PAGE OF