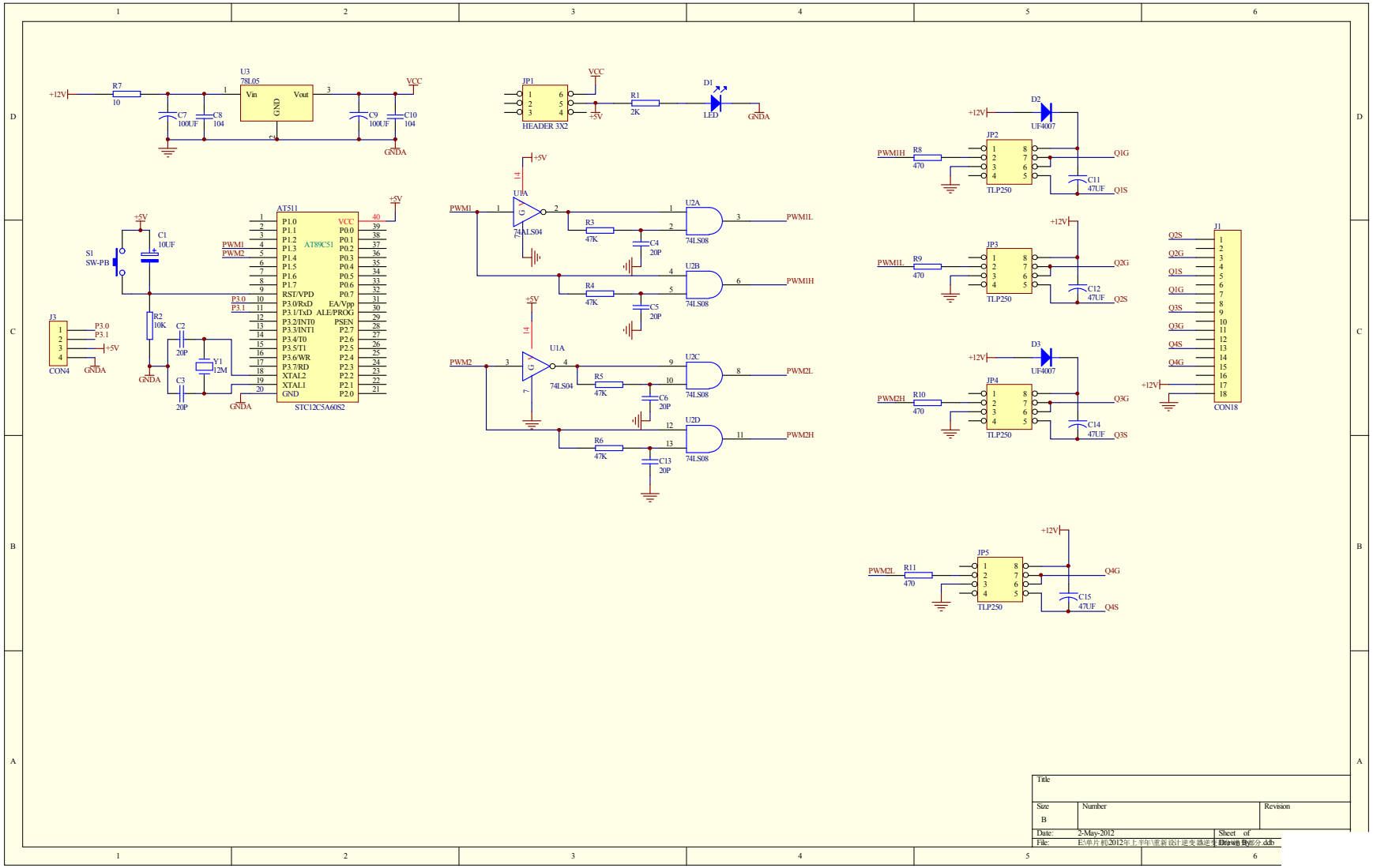
U3
78L05
Vin
Vout
GND
+12V
R7
10
C7
100UF
C8
104
C9
100UF
C10
104
VCC
GNDA
JP1
HEADER 3X2
R1
2K
D1
LED
+5V
AT511
AT89C51
STC12C5A60S2
P1.0
P1.1
P1.2
P1.3
P1.4
P1.5
P1.6
P1.7
RST/VPD
P3.0/RxD
P3.1/TxD
P3.2/INT0
P3.3/INT1
P3.4/T0
P3.5/T1
P3.6/WR
P3.7/RD
XTAL2
XTAL1
GND
VCC
P0.0
P0.1
P0.2
P0.3
P0.4
P0.5
P0.6
P0.7
EA/Vpp
ALE/PROG
PSEN
P2.7
P2.6
P2.5
P2.4
P2.3
P2.2
P2.1
P2.0
PWM1
PWM2
P3.0
P3.1
C1
10UF
S1
SW-PB
R2
10K
C2
20P
C3
20P
Y1
12M
J3
CON4
U1A
74LS04
U2A
U2B
U2C
U2D
74LS08
R3
47K
R4
47K
R5
47K
R6
47K
C4
20P
C5
20P
C6
20P
C13
20P
PWM1L
PWM1H
PWM2L
PWM2H
D2
D3
UF4007
JP2
JP3
JP4
JP5
TLP250
R8
470
R9
470
R10
470
R11
470
C11
47UF
C12
47UF
C14
47UF
C15
47UF
Q1G
Q1S
Q2G
Q2S
Q3G
Q3S
Q4G
Q4S
J1
CON18
Title
Size
B
Number
Revision
Date:
2-May-2012
Sheet of
File:
Drawn By: