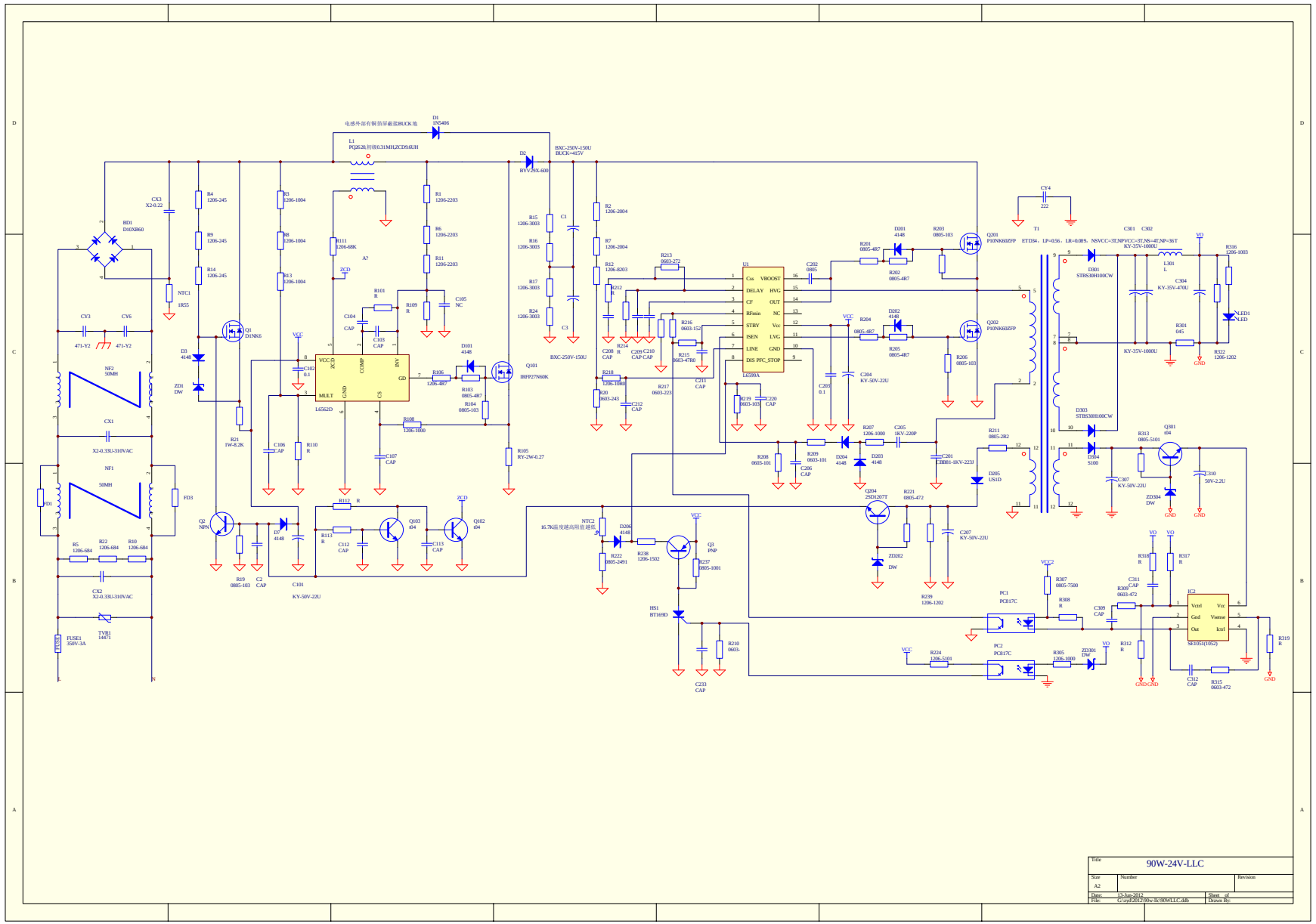

Title	90W-24V-LLC	
Size A2	Number	Revision
Date: 13-Jun-2012	Sheet of	
File: G:\cpd\2012\06w-lc\90WLLC.ddb	Drawn By:	