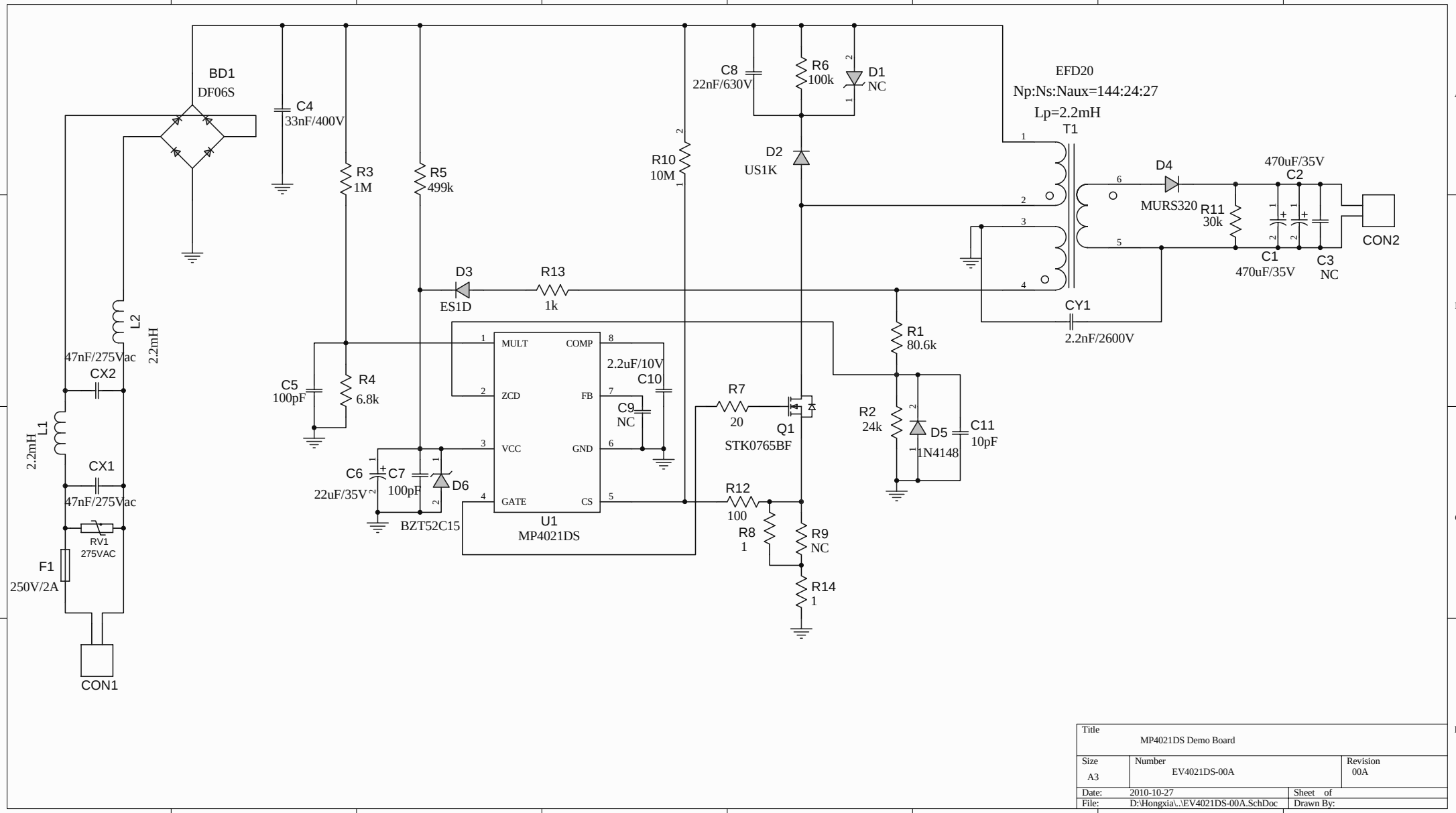

Title	MP4021DS Demo Board	
Size A3	Number EV4021DS-00A	Revision 00A
Date: 2010-10-27		Sheet of
File: D:\Hongxia\..\EV4021DS-00A.SchDoc		Drawn By: