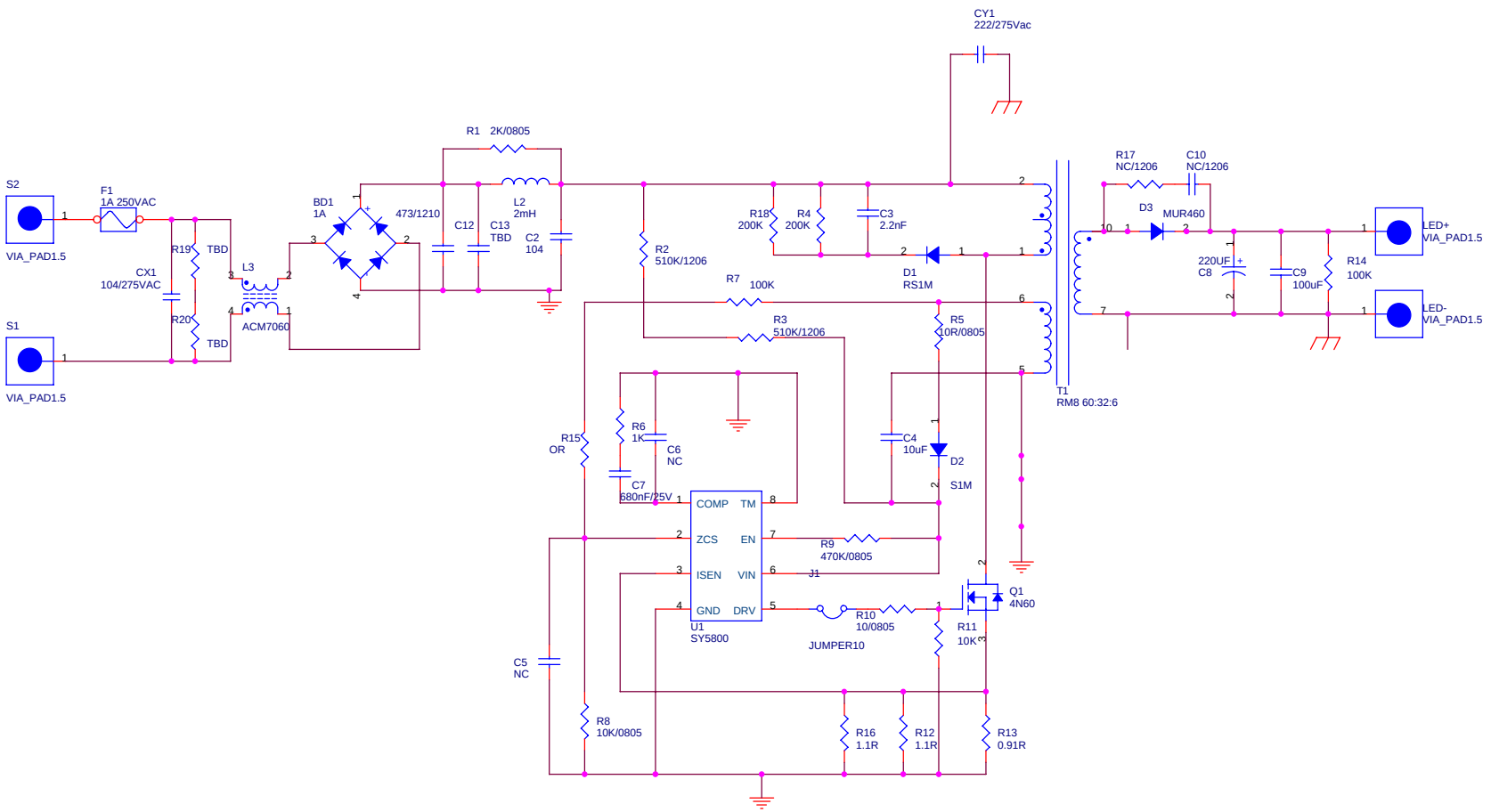

Title <Title>		
Size A3	Document Number <Doc>	Rev <RevCode>
Date: Thursday, August 23, 2012	Sheet 1 of 1	