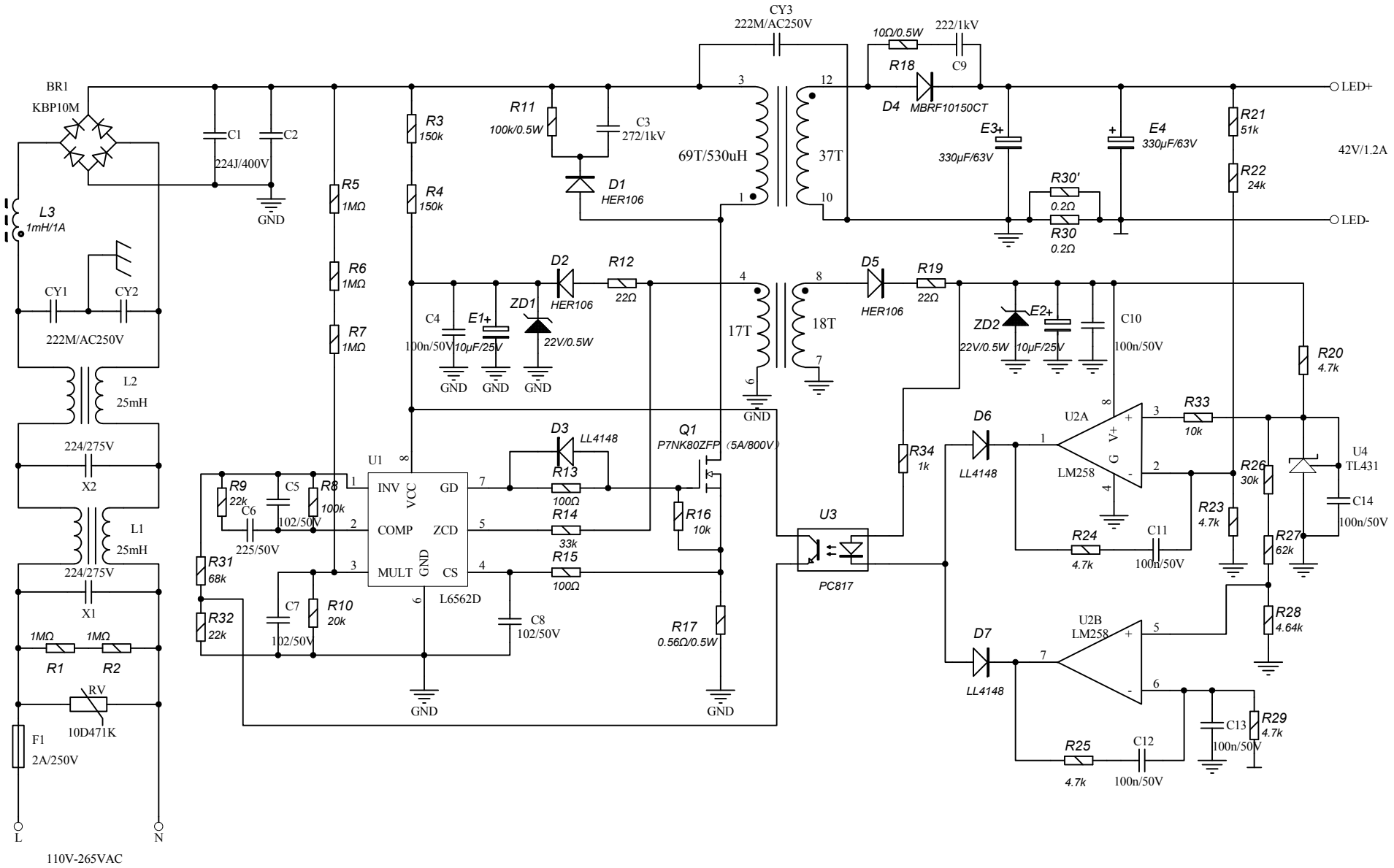

Title		
Size A4	Number	Revision
Date: 2012-8-30		Sheet of
File: E:\图纸资料\..\平板灯电源.SCHDOC		Drawn By: