21-Sep-2007

OCP

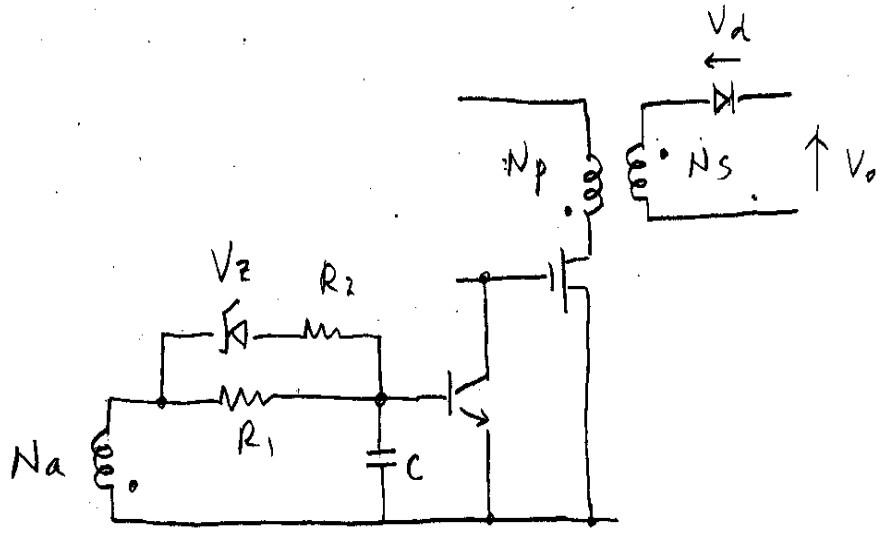

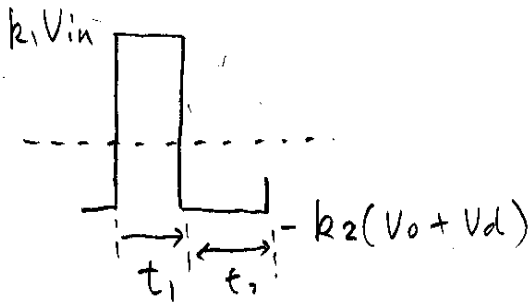

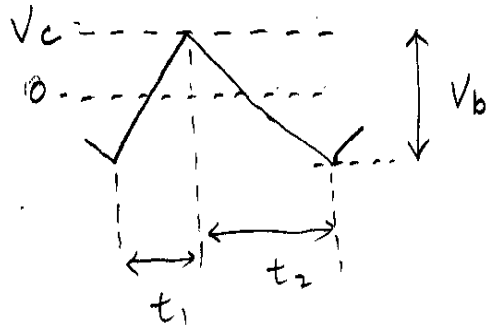

$$k_1 = \frac{N_a}{N_p} \quad \text{— ①}$$

$$k_2 = \frac{N_a}{N_s} \quad \text{— ②}$$

VT Balance →

$$k_1 \cdot V_{in} \cdot t_1 = k_2 \cdot (V_o + V_d) \cdot t_2$$

$$\therefore t_2 = \frac{k_1 \cdot V_{in}}{k_2 \cdot (V_o + V_d)} \cdot t_1 \quad \text{— ③}$$

CI waveform

$$CV = It$$

$$\therefore t_2 = \frac{C \cdot V_b}{\left(\dfrac{k_2 \cdot (V_o + V_d) + V_c - \frac{1}{2} V_b}{\left(\dfrac{R_1 \cdot R_2}{R_1 + R_2} \right)} \right)} \quad \text{— ④}$$

OCP

21-Sep-2002

a) If $k_1 \cdot V_{in} < V_z$

$$t_1 = \frac{C \cdot V_b}{\left(\frac{k_1 \cdot V_{in} - V_c + \frac{1}{2}V_b}{R_1}\right)} \quad \text{—— (5)}$$

(3), (4), (5) $\rightarrow$

$$V_b = \frac{R_1 k_1 k_2 V_{in}(V_o + V_d) + k_1 \cdot V_{in} \cdot V_c (R_1 + R_2) + R_2 \cdot V_c \cdot k_2 \cdot (V_o + V_d)}{\frac{1}{2}\left[R_2 \cdot k_2 \cdot (V_o + V_d) + k_1 \cdot V_{in} \cdot (R_1 + R_2)\right]}$$

Sub. into (5) $\rightarrow$ t_1
(4) $\rightarrow$ t_2

Let this condition be represented by V_{ba}, t_{1a}, t_{2a}

b). If $k_1 \cdot V_{in} > V_z$

$$t_1 = \frac{C \cdot V_b}{\left(\frac{k_1 \cdot V_{in} - V_c + \frac{1}{2}V_b}{R_1}\right) + \left(\frac{k_1 \cdot V_{in} - V_z - V_c + \frac{1}{2}V_b}{R_2}\right)} \quad \text{—— (6)}$$

(3), (4), (6)

$$V_b = \frac{k_1 \cdot k_2 \cdot V_{in} \cdot (V_o + V_d) + k_1 \cdot V_{in} \cdot V_c + \frac{R_1 \cdot k_2 \cdot V_z (V_o + V_d)}{R_1 + R_2} - k_2 \cdot (V_o + V_d) \cdot (k_1 \cdot V_{in} - V_c)}{\frac{1}{2}\left[k_2 (V_o + V_d) + k_1 \cdot V_{in}\right]}$$

Sub into (6) $\rightarrow$ t_1
(4) $\rightarrow$ t_2

Let this condition be represented by V_{bb}, t_{1b}, t_{2b}.

OCP

21-Sep-2002

Power output $P_o = \dfrac{\frac{1}{2} L I^2 \cdot \eta}{(t_1 + t_2)}$

$$= \frac{(LI)^2 \cdot \eta}{2L(t_1 + t_2)}$$

$$= \frac{V_{in}^2 \cdot t_1^2 \cdot \eta}{2L(t_1 + t_2)}$$

$\therefore$ Allowed $I_o = \dfrac{P_o}{V_o} = \dfrac{V_{in}^2 \cdot t_1^2 \cdot \eta}{2 \cdot V_o \cdot L \cdot (t_1 + t_2)}$

Remark

1. Add a time 't_o' (appro 0.2 μsec) to both t_1 and t_2. This give a reading closer to measured value.

2. H:\DOC_DAT\GUILD_LINE\DESIGN\OCP2.XLS
   OCP2.PDF