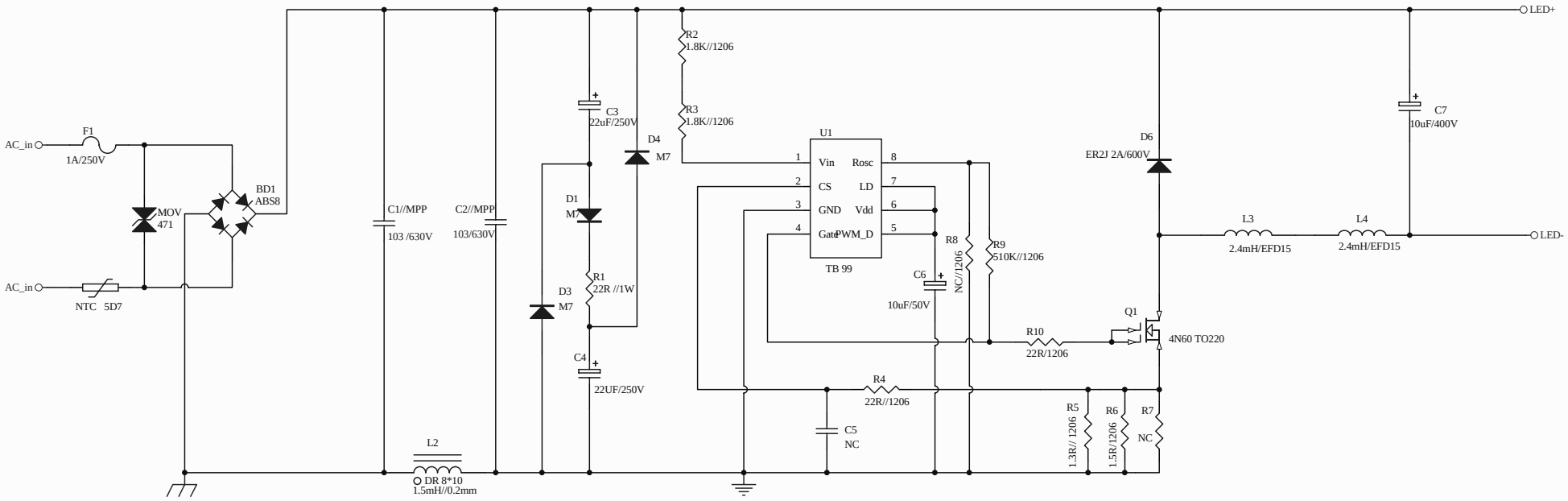

Title	***TB99 24串12并***	
Size B	Number	Revision
Date: 2011-11-30		Sheet of
File: C:\Documents and Settings\...\TB99 PFC.SCH		Drawn By: