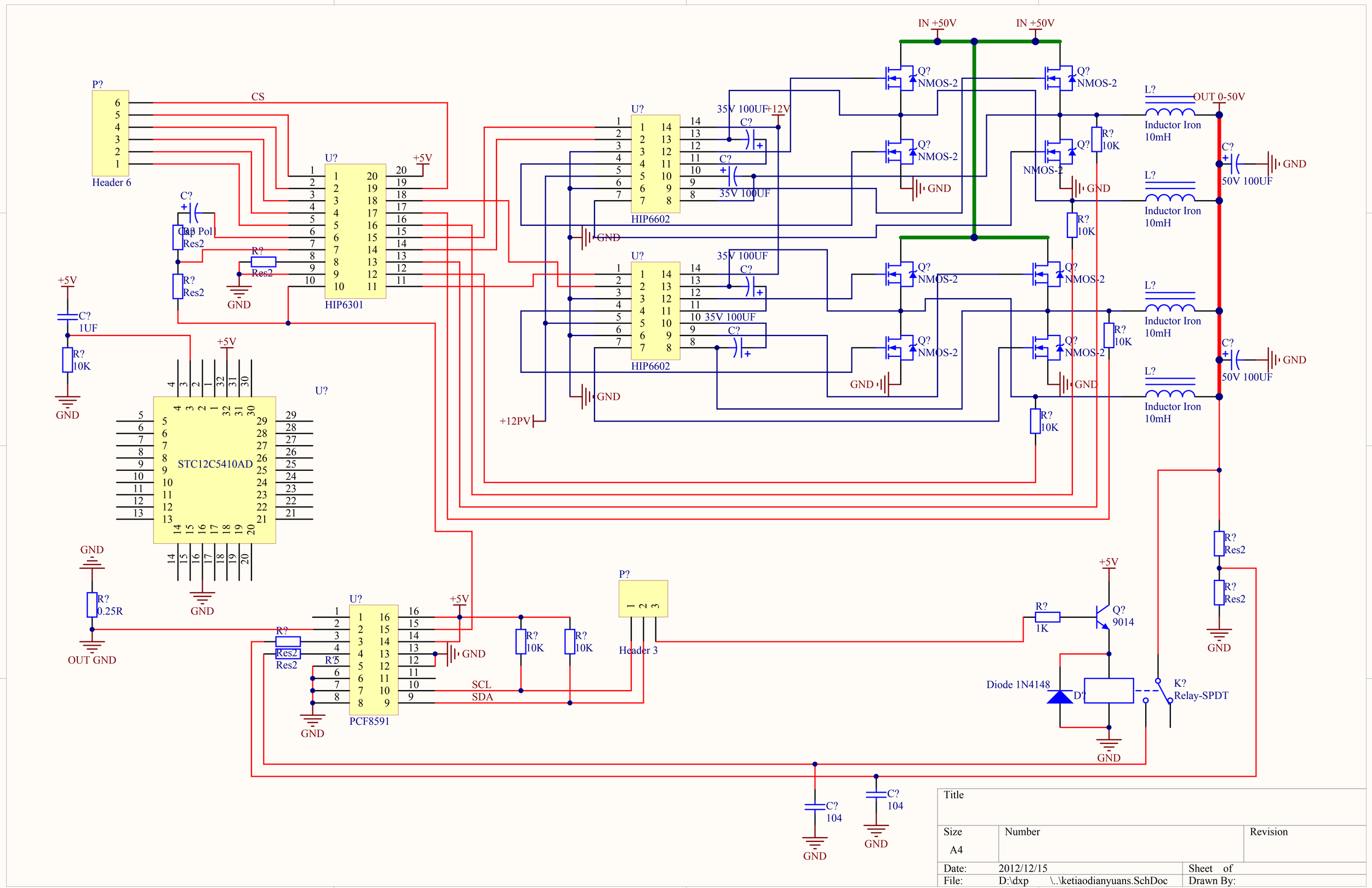
P?
Header 6
CS
U?
HIP6301
+5V
C?
Cap Pol1
Res2
R?
Res2
GND
+5V
C?
1UF
R?
10K
GND
U?
STC12C5410AD
GND
R?
0.25R
OUT GND
U?
PCF8591
R?
Res2
R'5
SCL
SDA
R?
10K
R?
10K
P?
Header 3
U?
HIP6602
35V 100UF
+12V
C?
+12PV
IN +50V
IN +50V
Q?
NMOS-2
L?
Inductor Iron
10mH
OUT 0-50V
C?
50V 100UF
R?
10K
R?
1K
Q?
9014
Diode 1N4148
D?
K?
Relay-SPDT
R?
Res2
C?
104
Title
Size
A4
Number
Revision
Date:
2012/12/15
Sheet of
File:
D:\dxp \..\ketiaodianyuans.SchDoc
Drawn By: