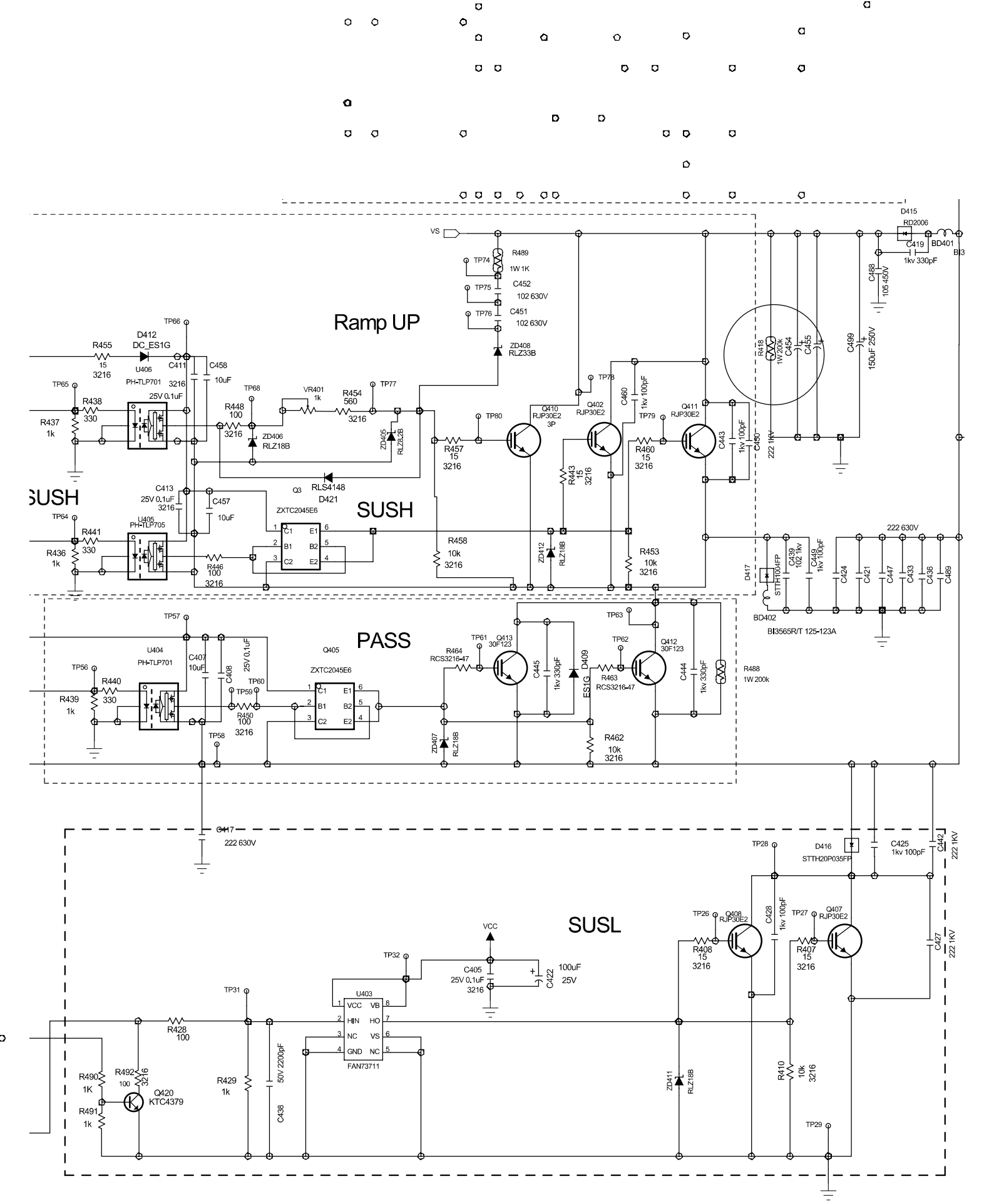

Ramp UP
SUSH
PASS
SUSL
VS
R489
1W 1K
C452
102 630V
C451
102 630V
ZD408
RLZ33B
D415
RD2006
C419
1kv 330pF
BD401
C488
105 450V
R418
1W 200k
C454
C455
C499
150uF 250V
TP74
TP75
TP76
TP66
R455
15
3216
D412
DC_ES1G
U406
PH-TLP701
C411
3216
C458
10uF
TP65
R438
330
R437
1k
25V 0.1uF
TP68
R448
100
3216
ZD406
RLZ18B
VR401
1k
R454
560
3216
TP77
ZD405
RLZ8.2B
TP80
R457
15
3216
Q410
RJP30E2
3P
TP78
Q402
RJP30E2
C460
1kv 100pF
TP79
Q411
RJP30E2
R460
15
3216
C443
1kv 100pF
C450
222 1KV
R443
15
3216
C413
25V 0.1uF
3216
C457
10uF
Q3
RLS4148
D421
ZXTC2045E6
TP64
R441
330
R436
1k
U405
PH-TLP705
R446
100
3216
R458
10k
3216
ZD412
RLZ18B
R453
10k
3216
222 630V
D417
STTH1004FP
C439
102 1kv
C449
1kv 100pF
C424
C421
C447
C433
C436
C489
BD402
BI3565R/T 125-123A
TP57
U404
PH-TLP701
C407
10uF
C408
25V 0.1uF
Q405
ZXTC2045E6
TP56
R440
330
R439
1k
TP59
TP60
R450
100
3216
TP58
R464
RCS3216-47
TP61
Q413
30F123
C445
1kv 330pF
D409
ES1G
TP63
TP62
Q412
30F123
R463
RCS3216-47
C444
1kv 330pF
R488
1W 200k
ZD407
RLZ18B
R462
10k
3216
C417
222 630V
TP28
D416
STTH20P035FP
C425
1kv 100pF
C442
222 1KV
TP26
Q408
RJP30E2
C428
1kv 100pF
TP27
Q407
RJP30E2
R408
15
3216
R407
15
3216
C427
222 1KV
VCC
TP32
C405
25V 0.1uF
3216
C422
100uF
25V
U403
VCC
VB
HIN
HO
NC
VS
GND
NC
FAN73711
TP31
R428
100
R490
1K
R492
100
3216
Q420
KTC4379
R491
1k
R429
1k
50V 2200pF
C438
ZD411
RLZ18B
R410
10k
3216
TP29