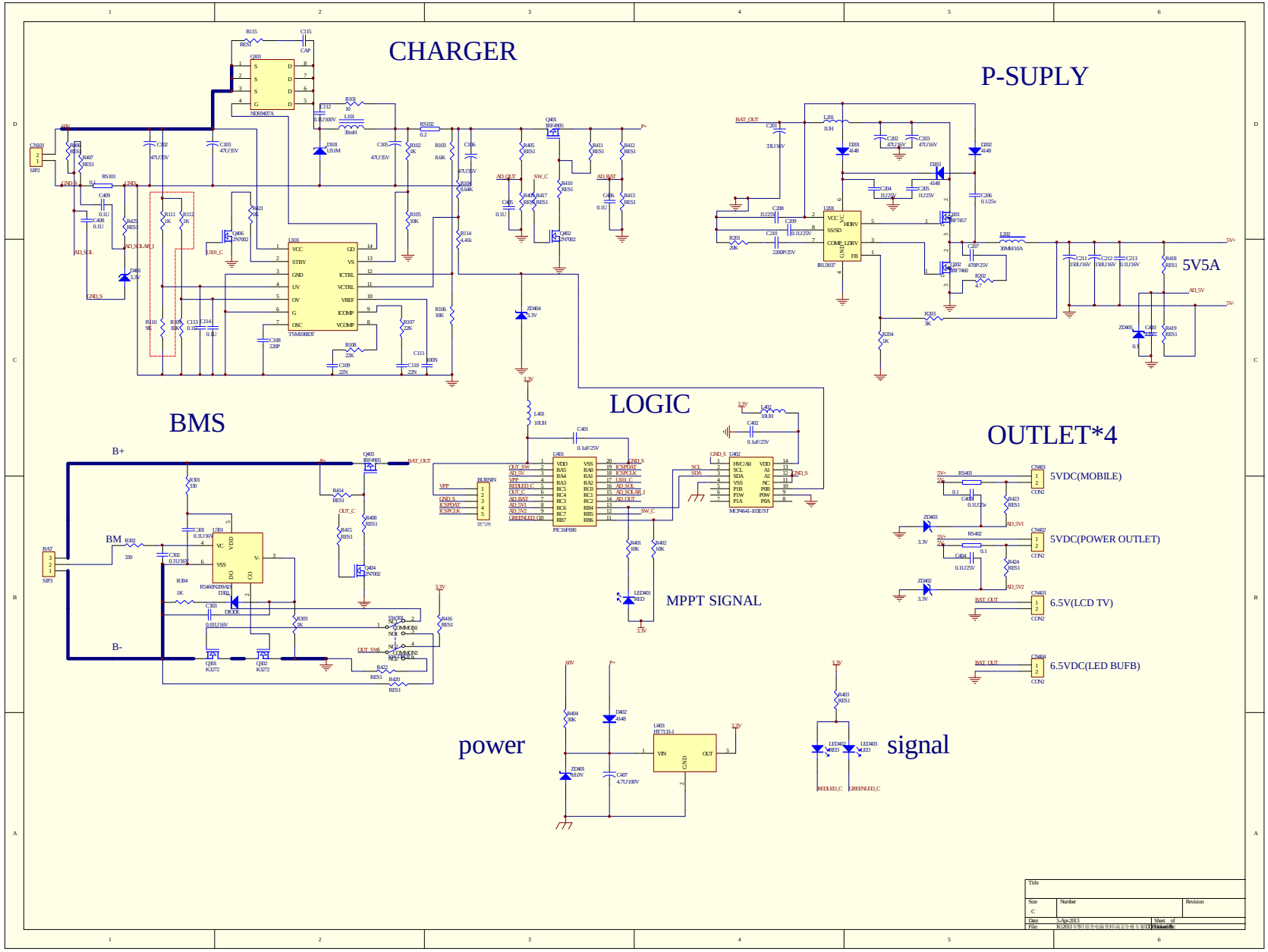
CHARGER
P-SUPLY
5V5A
BMS
LOGIC
OUTLET*4
5VDC(MOBILE)
5VDC(POWER OUTLET)
6.5V(LCD TV)
6.5VDC(LED BUFB)
MPPT SIGNAL
power
signal
Title
Size
C
Number
Revision
Date
5-Apr-2013
Sheet of
File
Drawn by