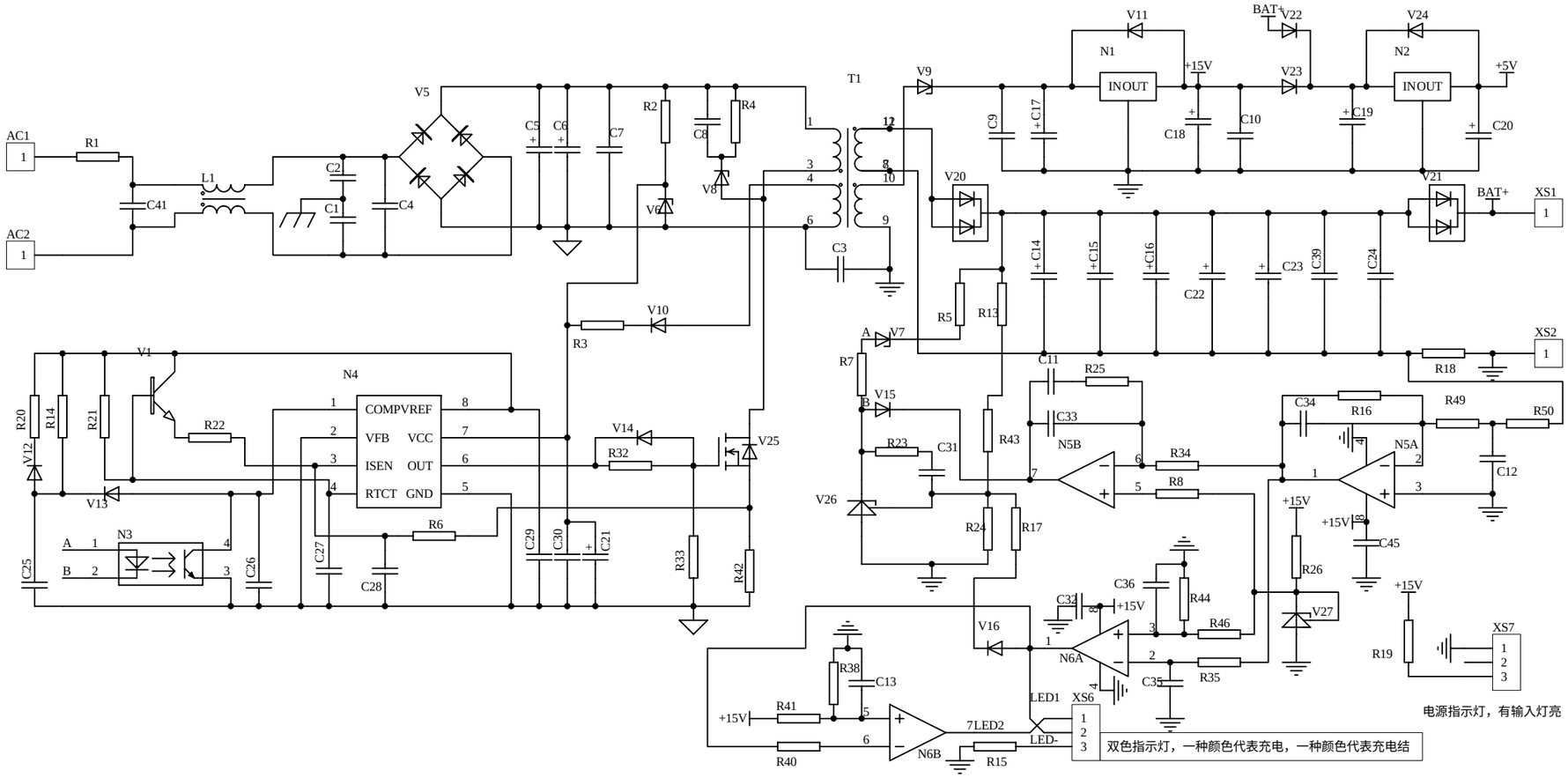

Title		
Size A3	Number	Revision
Date: 15-Mar-2011	Sheet of	
File: C:\Documents and Settings\Owner\桌面\原理图.DDB		