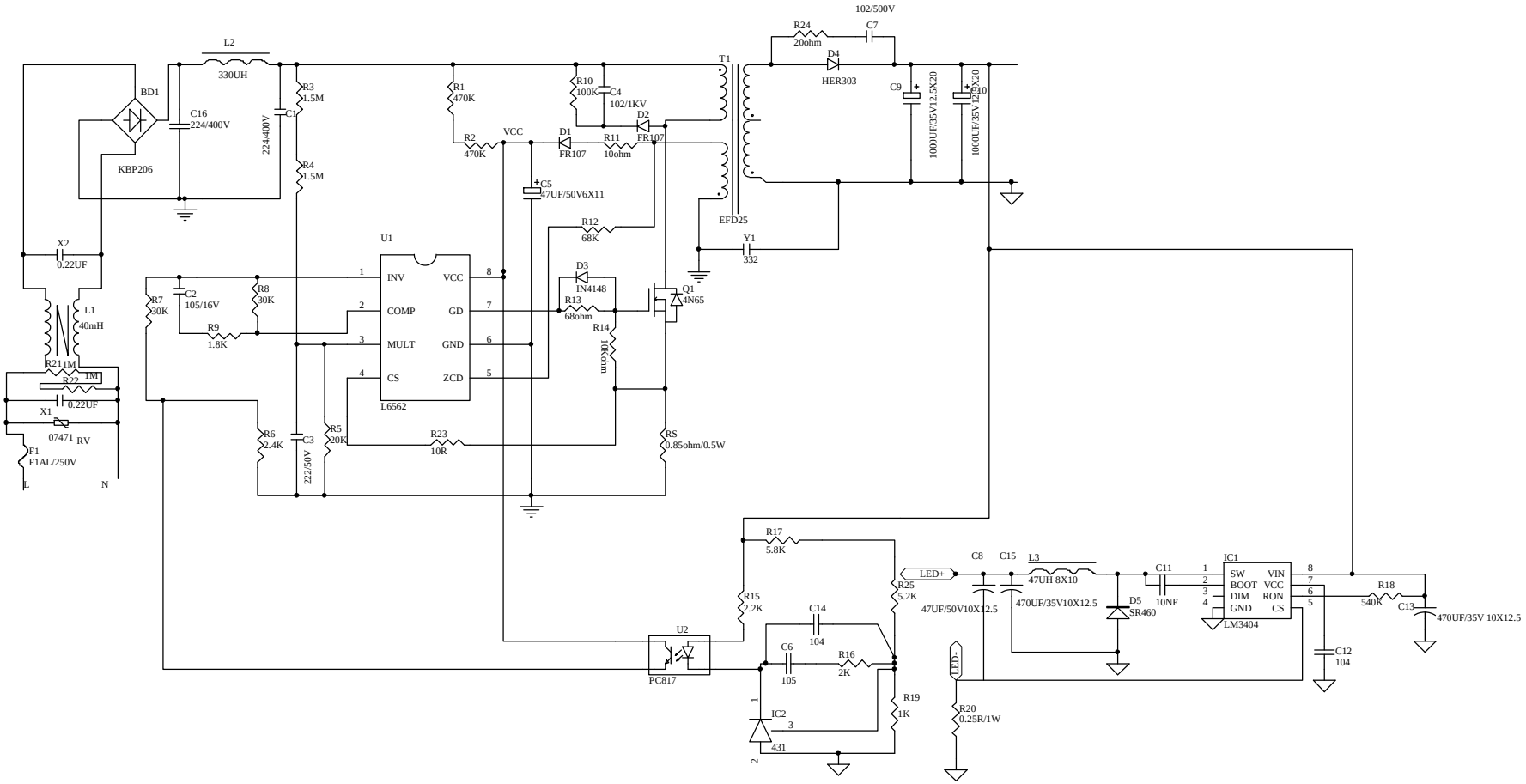

Title		
Size A3	Number	Revision
Date: 7-May-2013		Sheet of
File: D:\228\复件 LED-K25W.ddb		Drawn By: