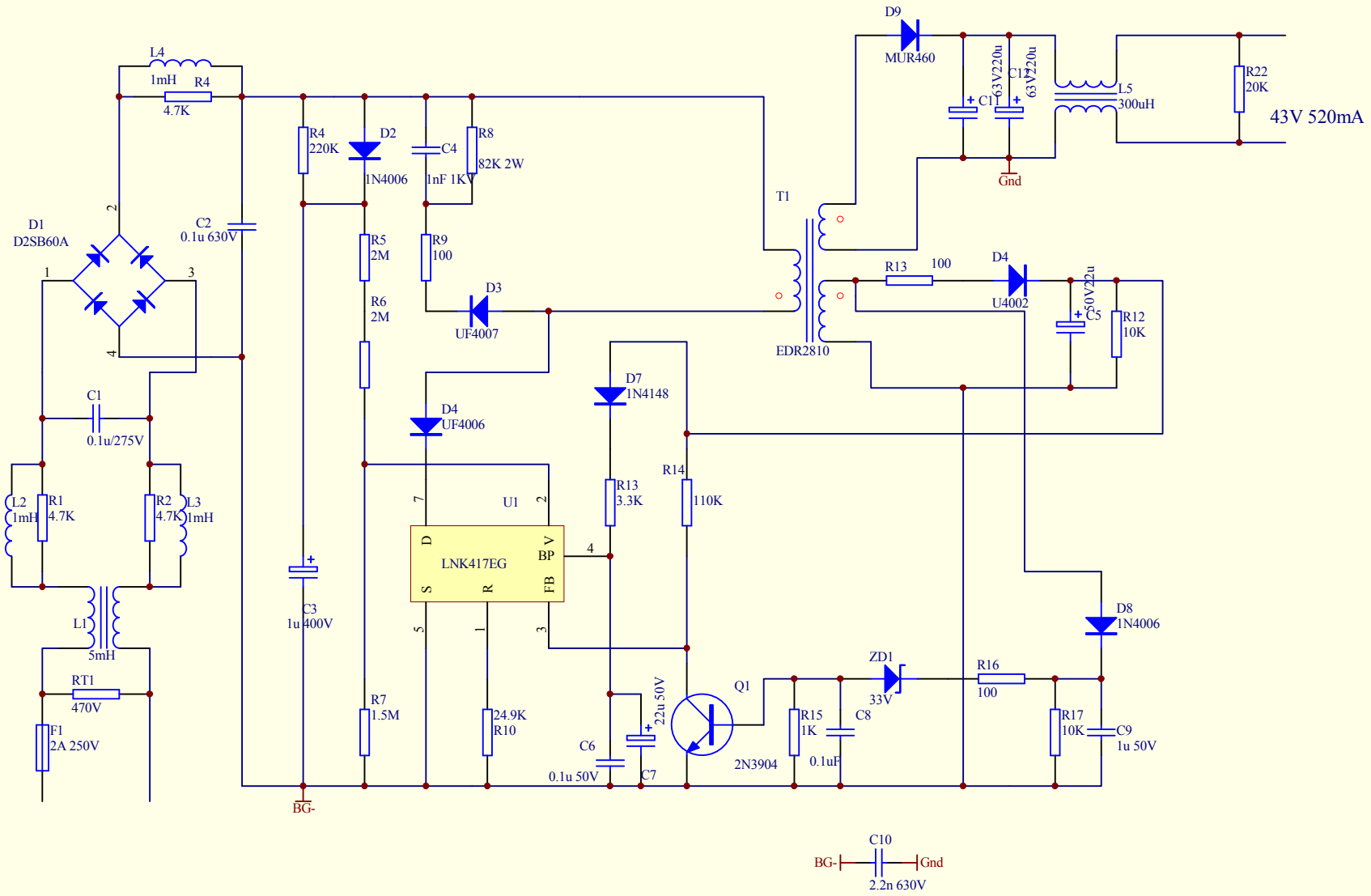

Title		
Size A4	Number	Revision
Date: 3-Jul-2013		Sheet of
File: E:\室内照明灯管.Ddb		Drawn By: