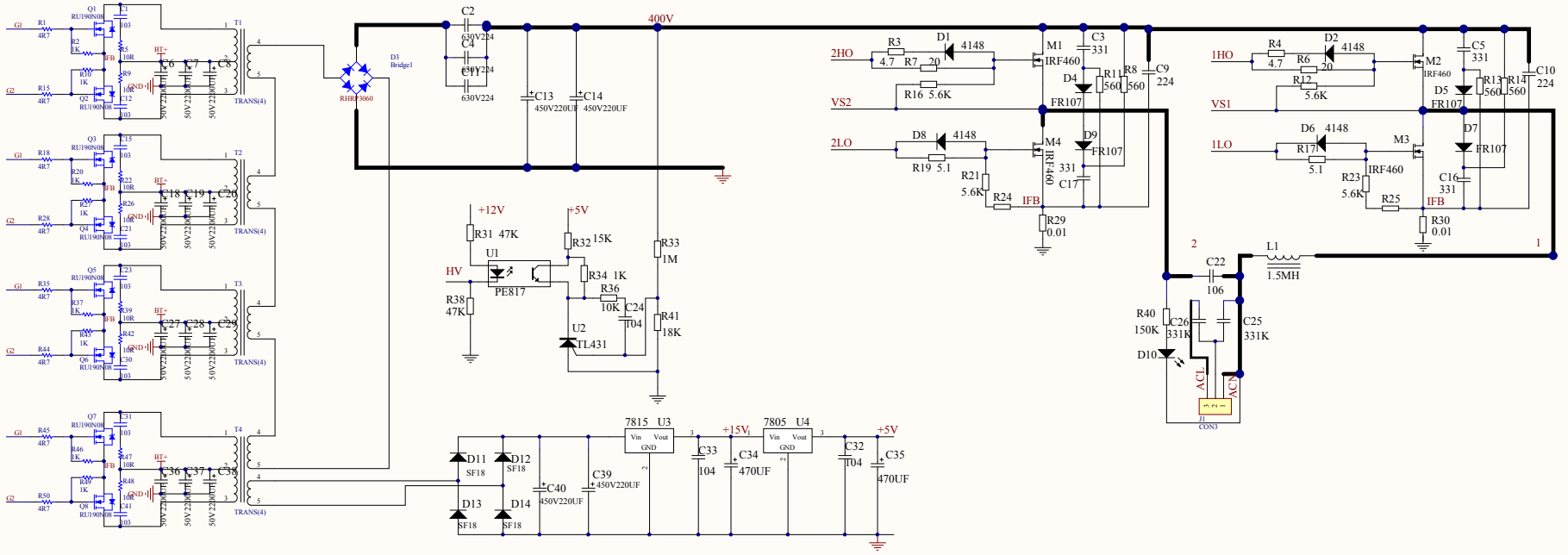

Title		
Size A2	Number	Revision
Date: 2013-7-19	Sheet of	
File: C:\Documents and Settings\...\Sheet1.SchDoc	Drawn By:	