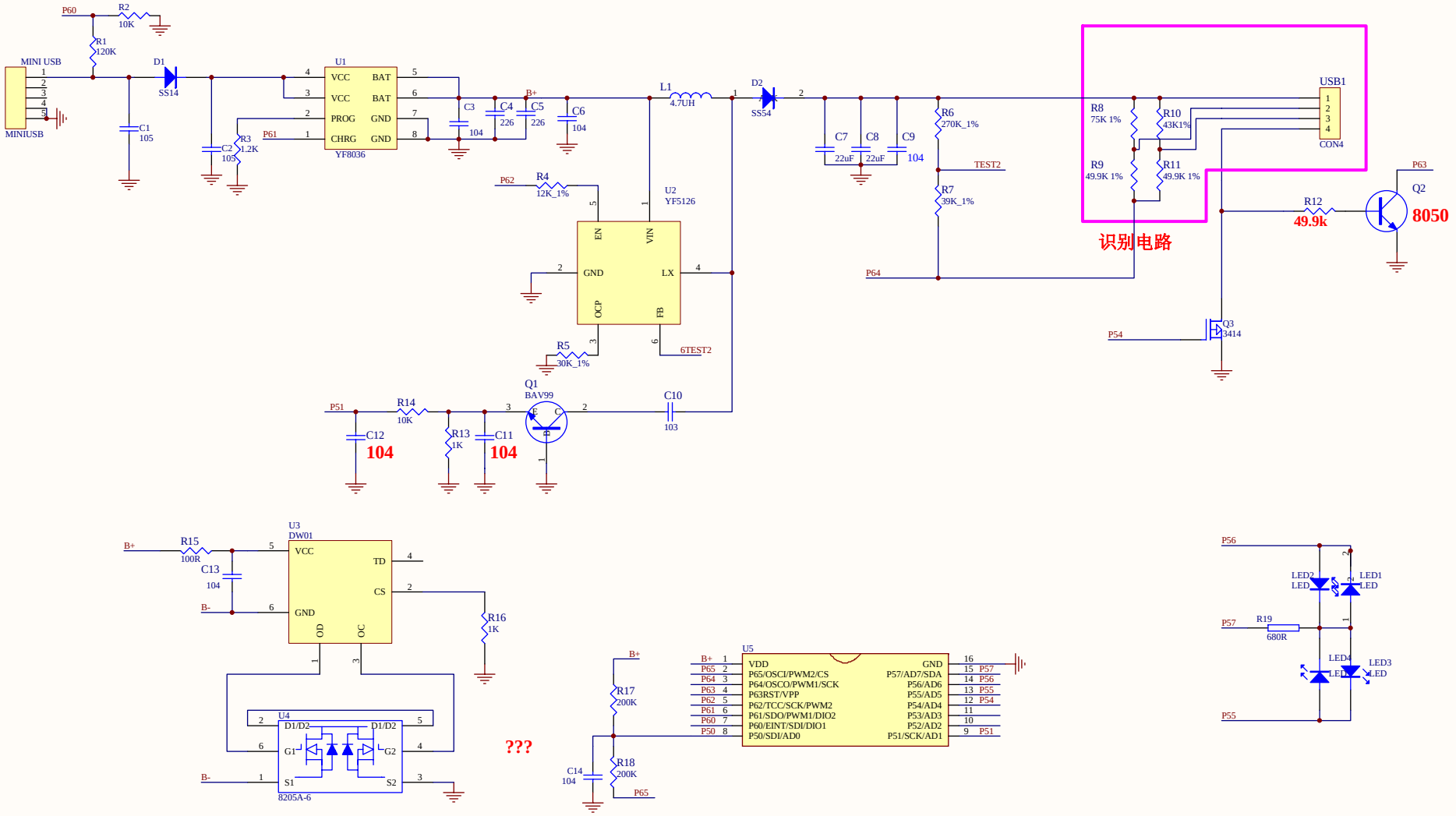

Title		
Size A3	Number	Revision
Date: 26-Jul-2013	Sheet of	
File: E:\my work\PCB FILE\PCB-ALL\PCB-A_LED.Ddb	Drawn By:	