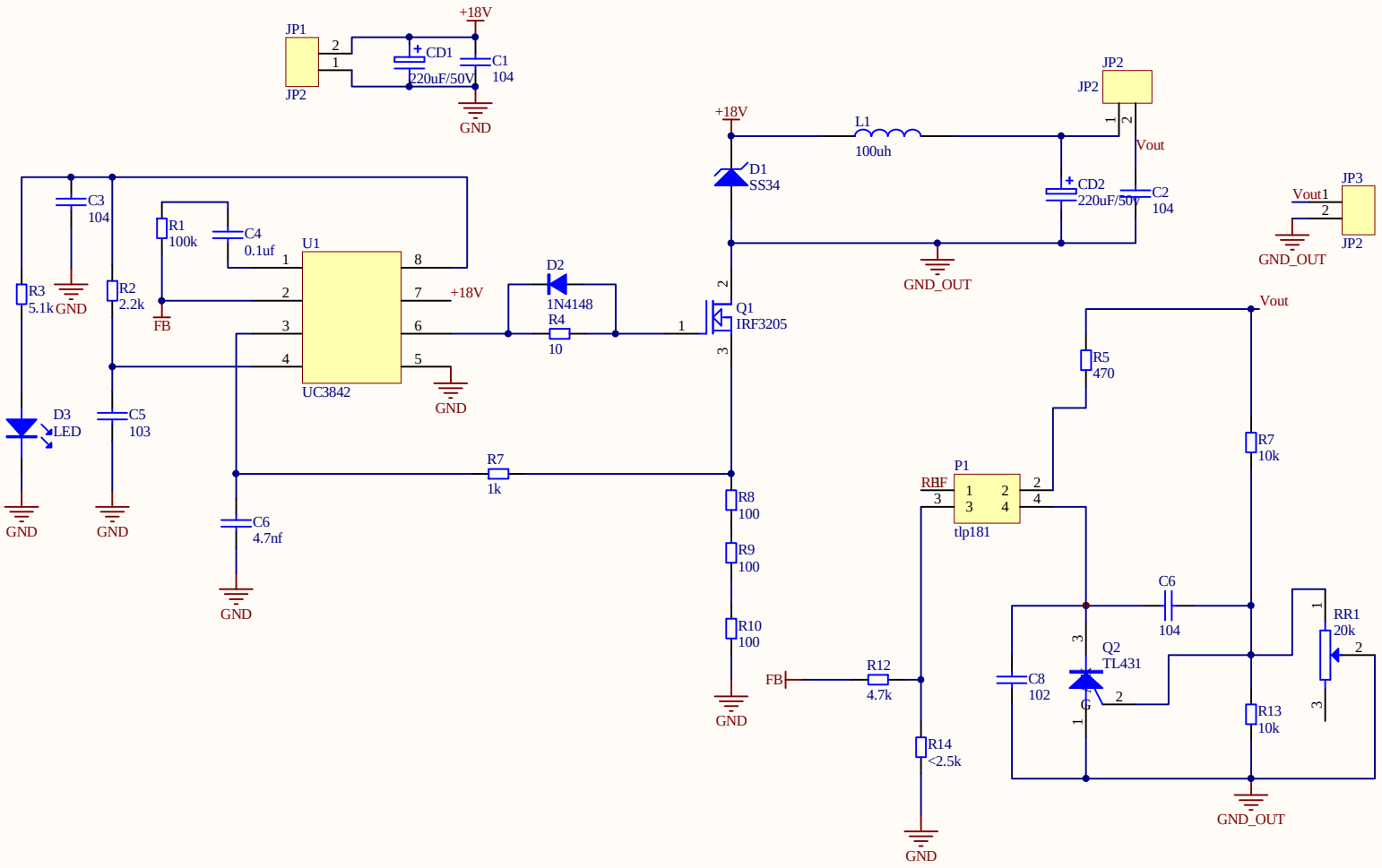

Title		
Size A4	Number	Revision
Date: 2013/8/23		Sheet of
File: C:\Users\..\buck电路_最终版.SchDoc		Drawn By: