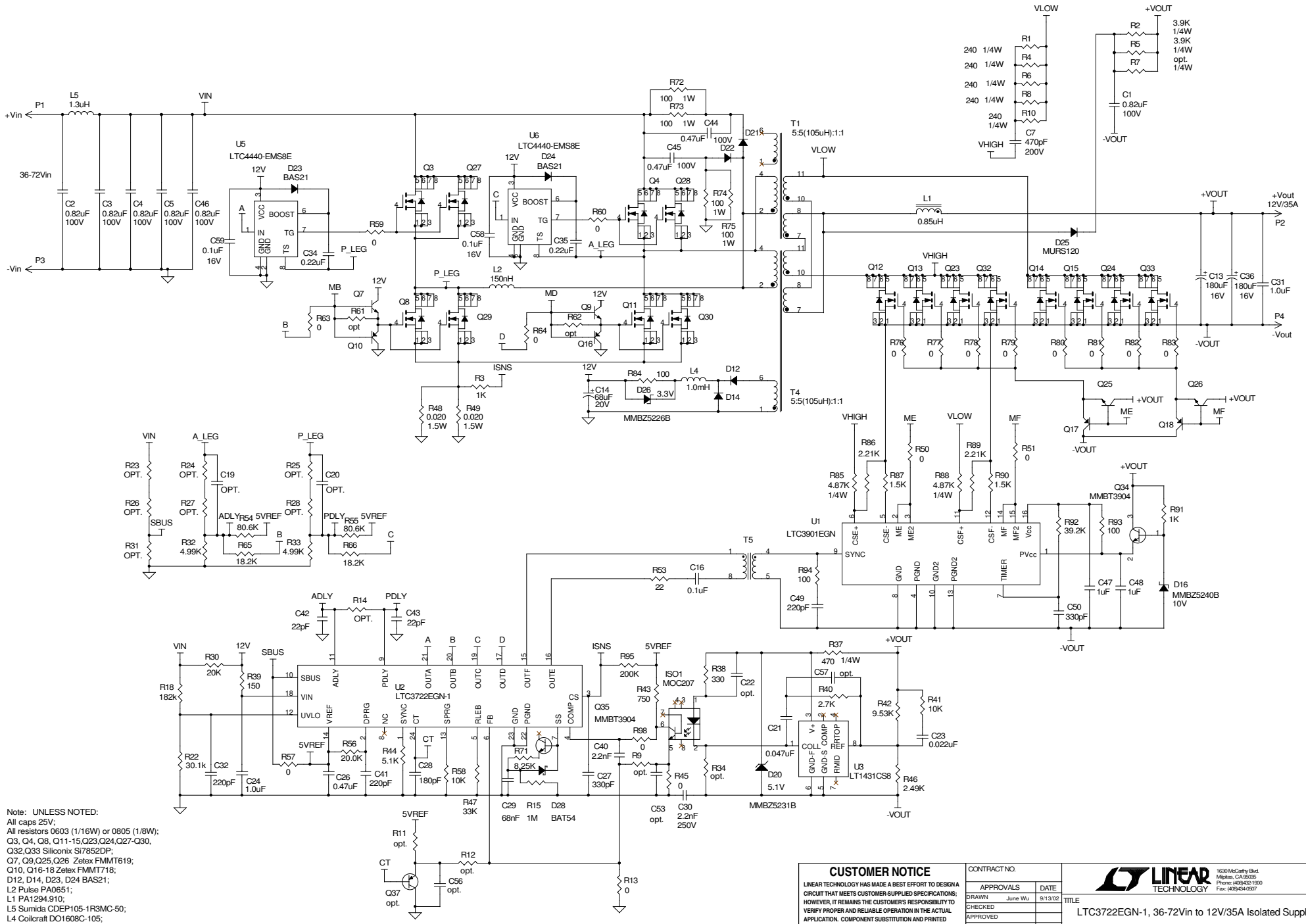

Note: UNLESS NOTED:
All caps 25V;
All resistors 0603 (1/16W) or 0805 (1/8W);
Q3, Q4, Q8, Q11-15,Q23,Q24,Q27-Q30,
Q32,Q33 Siliconix Si7852DP;
Q7, Q9,Q25,Q26 Zetex FMMT619;
Q10, Q16-18 Zetex FMMT718;
D12, D14, D23, D24 BAS21;
L2 Pulse PA0651;
L1 PA1294.910;
L5 Sumida CDEP105-1R3MC-50;
L4 Coilcraft DO1608C-105;
T5 Pulse PA0297;
T1,T4 Pulse PA0526;
D21,D22,D25 MURS120;

CUSTOMER NOTICE

LINEAR TECHNOLOGY HAS MADE A BEST EFFORT TO DESIGN A CIRCUIT THAT MEETS CUSTOMER-SUPPLIED SPECIFICATIONS; HOWEVER, IT REMAINS THE CUSTOMER'S RESPONSIBILITY TO VERIFY PROPER AND RELIABLE OPERATION IN THE ACTUAL APPLICATION. COMPONENT SUBSTITUTION AND PRINTED CIRCUIT BOARD LAYOUT MAY SIGNIFICANTLY AFFECT CIRCUIT PERFORMANCE OR RELIABILITY. CONTACT LINEAR TECHNOLOGY APPLICATIONS ENGINEERING FOR ASSISTANCE.

THIS CIRCUIT IS PROPRIETARY TO LINEAR TECHNOLOGY AND SUPPLIED FOR USE WITH LINEAR TECHNOLOGY PARTS.

CONTRACT NO.

APPROVALS		DATE
DRAWN	June Wu	9/13/02
CHECKED		
APPROVED		
ENGINEER	Kurk Mathews	9/13/02
DESIGNER		

Wednesday, October 19, 2005

LINEAR TECHNOLOGY
1630 McCarthy Blvd.
Milpitas, CA 95035
Phone: (408)432-1900
Fax: (408)434-0507

TITLE
LTC3722EGN-1, 36-72Vin to 12V/35A Isolated Supply

SIZE	CAGE CODE	DWG NO	REV
		DC607A	A

SCALE: FILENAME: SHEET 1 OF 1